SERVICE MANUAL

notebook

Notebook Computer

D610S/D620S/D630S

Service Manual

Notice

The company reserves the right to revise this publication or to change its contents without notice. Information contained herein is for reference only and does not constitute a commitment on the part of the manufacturer or any subsequent vendor. They assume no responsibility or liability for any errors or inaccuracies that may appear in this publication nor are they in anyway responsible for any loss or damage resulting from the use (or misuse) of this publication.

This publication and any accompanying software may not, in whole or in part, be reproduced, translated, transmitted or reduced to any machine readable form without prior consent from the vendor, manufacturer or creators of this publication, except for copies kept by the user for backup purposes.

Brand and product names mentioned in this publication may or may not be copyrights and/or registered trademarks of their respective companies. They are mentioned for identification purposes only and are not intended as an endorsement of that product or its manufacturer.
Version 1.0
May 2002

Trademarks

Intel® and **Pentium**® are registered trademarks of Intel Corporation.
Windows® is a registered trademark of Microsoft Corporation.
Other brand and product names are trademarks and./or registered trademarks of their respective companies.

About this Manual

This manual is intended for service personnel who have completed sufficient training to undertake the maintenance and inspection of personal computers.

It is organized to allow you to look up basic information for servicing and/or upgrading components of the notebook PC.

The following information is included:

Chapter 1, Introduction, provides general information about the location of system elements and their specifications.
Chapter 2, Disassembly, provides step-by-step instructions for disassembling parts and subsystems and how to upgrade elements of the system.
Appendix A, Part Lists
Appendix B, Schematic Diagrams

Related Documents

You may also need to consult the following manual for additional information:

User's Manual on CD

This describes the notebook PC's features and the procedures for operating the computer and its ROM-based setup program. It also describes the installation and operation of the utility programs provided with the notebook PC.

Contents

Introduction 1-1

Overview 1-1
System Specifications 1-2
Processor 1-2
Core Logic 1-2
Structure 1-2
Security 1-2
Memory 1-2
BIOS 1-2
LCD 1-2
Display 1-3
Storage 1-3
Audio 1-3
PC Card 1-3
Interface 1-4
Communication 1-4
Power Management 1-4
Power 1-5
Indicators 1-5
Environmental Spec 1-5
Physical Dimensions 1-5
Weight 1-5
Optional 1-5
External Locator - Top Views 1-6
External Locator - Front & Left Views 1-7
External Locator - Right & Rear Views 1-8
External Locator - Bottom View 1-9

Disassembly 2-1

Overview 2-1
Maintenance Tools 2-2
Connections 2-2
Maintenance Precautions 2-3
Disassembly Steps 2-4
Removing the Battery 2-5
Removing the Hard Disk Drive Assembly 2-6
Removing the CD Device 2-7
Removing the Keyboard 2-8
Removing the System Memory 2-9
Removing the CPU 2-10
Removing the Bottom Case 2-12

Part Lists A-1

Part List Illustration Location A-2
Top (D610S) A-3
Bottom (D610S) A-4
LCD 14" (D610S) A-5
LCD 15" (D610S) A-6
Battery (D610S) A-7
Samsung CD-ROM Drive (D610S) A-8
TEAC CD-ROM Drive (D610S) A-9
KME CD-RW Drive (D610S) A-10
Combo Drive (D610S) A-11
Toshiba DVD-ROM Drive (D610S) A-12
Hard Disk Drive (D610S) A-13
Top (D630S) A-14
Bottom (D630S) A-15
LCD 14" (D630S) A-16
LCD 15" (D630S) A-17
Battery (D630S) A-18
Samsung CD-ROM Drive (D630S) A-19

TEAC CD-ROM Drive (D630S) A-20
KME CD-RW Drive (D630S) A-21
Combo Drive (D630S) A-22
Toshiba DVD-ROM Drive (D630S) A-23
Hard Disk Drive (D630S) A-24

Schematic Diagrams B-1

System Block Diagram B-3
Table B-4
CPU Socket 478 - 1 of 2 ..... B-5
CPU Socket 478 - 2 of 2 ..... B-6
VCC Core Power B-7
+2.5V, +1.8VS, +1.25VS B-8
Main Clock Generator B-9
650-1 (Host/AGP) - 1 of 4 ..... B-10
650-2 (Memory for DDR) - 2 of 4 ..... B-11
650-3 (HyperZip/VGA/Misc) - 3 of 4 ..... B-12
650-4 (Power) - 4 of 4 ..... B-13
DDR SDRAM DIMM1 & DIMM2 ..... B-14
SSTL-2 Termination Resistors B-15
Chrontel CH7017 LVDS Interface B-16
Chrontel CH7017 TV Encoder and S-Video Port B-17
961A-1 (PCI/IDE/HyperZip) - 1 of 4 ..... B-18
961A-2 (Misc Signals) - 2 of 4 ..... B-19
961A-3 (USB) - 3 of 4 ..... B-20
961A-4 (Power & RTC) - 4 of 4 ..... B-21
IDE Connectors B-22
PCI LAN RTL8139C B-23
PCMCIA TI PCI1410 ..... B-24
TI1394 (TSB43AB22) B-25
LPC Super I/O & ROM B-26
LPC H8 ..... B-27

Fan / Audio & Modem Conn B-28
Power Board / Power Button B-29
+3V, +5V, +12V B-30
Charger - PWM B-31
3VH8, +1.8V B-32
Inverter Board B-33

1: Introduction

Overview

This manual covers the information you need to service or upgrade the D610S/D620S/D630S series notebook computer. Information about operating the computer (e.g. getting started, and the *Setup* utility) is in the *User's Manual*. Information about drivers (e.g. VGA & audio) is also found in *User's Manual*. That manual is shipped with the computer.

Operating systems (e.g. *DOS, Windows 9x, Windows NT 4.0, Windows 2000, Windows XP, OS/2 Warp, UNIX,* etc.) have their own manuals as do application software (e.g. word processing and database programs). If you have questions about those programs, you should consult those manuals.

The D610S/D620S/D630S series notebook is designed to be upgradeable. See **"Disassembly" on page 2 - 1** for a detailed description of the upgrade procedures for each specific component. Please note the warning and safety information indicated by the " " symbol.

The balance of this chapter reviews the computer's technical specifications and features.

System Specifications

Processor

- Intel Pentium 4 Processor - (478-pin) FC-PGA2 package
  (µ0.18) 0.18 Micron Process Technology, 256K L2 Cache & 400MHz FSB - 1.5/1.6/1.7/1.8 GHz
  (µ0.13) 0.13 Micron Process Technology, 512K L2 Cache & 400MHz FSB - 2.0/ 2.2/ 2.4/ 2.5 GHz

Core Logic

- SIS650

Structure

- Fully PC99 Compliant
- ACPI 1.0B Compliant
- PC2001 Compliant

Security

- Kensington® Lock

Memory

- Two 200-pin DDR SODIMM sockets, supporting DDR SDRAM SODIMM (2.5V) - DDR266 compliant
- Expandable memory up to 1GB (128/256/512MB SODIMM Modules)

BIOS

- One 512KB Flash ROM
- Phoenix BIOS

LCD

- 14.1" XGA TFT (1024*768)
  OR
- 15.0" SXGA+ TFT (1400*1050)

Display

- 4 * AGP™
- Integrated 128-bit 2D/3D graphics engine
  Advanced HW accelerator for DVD content playback
  Motion compensation and IDCT accelerator
- Dual-View display monitor
- Integrates a NTSC/PAL video encoder with Macro version option for TV display

Video Memory Note: The system allocates or "shares" a portion of system memory for video use. "Shared" memory is user-configurable via the SCU. The default setting is set to **32MB**, and in addition, may be adjusted to **16MB** or **64MB**.

Storage

- One changeable 2.5" 9.5mm HDD supporting Master mode IDE & PIO mode 4/ATA-33/66/100 (Ultra DMA)
- Optional 12.7mm (h) 24 * CD-ROM drive, OR 8 * DVD-ROM drive, OR CD-RW drive, OR combo drive (8 * DVD-ROM + CD-RW)

Audio

- AC'97 compliant interface
- 3D stereo enhanced sound system
- Compatible with Sound-Blaster PRO™ 16
- S/PDIF Digital output (5.1 CH) for DVD content and stereo audio
- Microphone-in jack
- Headphone-out jack
- Built-in microphone
- 2 built-in speakers

Keyboard

- “Win Key” keyboard

PC Card

- One type II PCMCIA 3.3V/5V/12V sockets (no Zoomed Video support)
- Supports one CardBus slot

Interface

- Built-in TouchPad (scrolling key functionality integrated)
- Three USB ports
- One IEEE 1394 port
- One S-Video jack for TV output
- One parallel port (LPT1), supporting ECP / EPP 1.7 and 1.9
- Fast Infrared (FIR) file transfer IrDA 1.1 FIR/SIR/ASKIR
- One external CRT monitor port
- One external keyboard/mouse (through Y cable) PS/2 port
- One speaker-out/headphone-out jack
- One microphone-in jack
- One RJ-11 jack for modem
- One RJ-45 jack for 100M/10M LAN
- One S/PDIF out port
- One DC-in jack
- Three built-in instant keys for web browser, email & DVD/CD player

Communication

- Wireless Infrared transfer IrDA 1.1, up to 1M operating distance, 115.2K bps SIR/ 4Mbps FIR
- 10/100Mb Ethernet LAN built-in
- 56K MDC modem V.90 & V.92 compliant

Power Management

- Supports ACPI v1.0B
- Supports suspend to RAM
- Supports suspend to disk
- Battery low suspend
- Resume from modem ring (S3)
- Resume from LAN (S3)

Power

- Full range AC adapter - AC-In 100~240V, 50~60Hz, DC Output 20V, 6A
- Supports one removable Smart Li-Ion battery 11.1v/ 6.0Ah, 6000mAH

Indicators

- LED indicators (HDD, Power On/ AC-In/ Suspend, Battery Charging/Battery Full, E-mail, Num Lock, Caps Lock, Scroll Lock)

Environmental Spec

• Temperature	Relative Humidity
• Operating: 5°C~ 35°C	Operating: 20% ~ 80%
• Non-Operating: -20°C ~ 60°C	Non-Operating: 10% ~ 90%

Physical Dimensions

- 331 (w) x 280 (d) x 44.5 (h) mm

Weight

- 3.2 kg w/o battery

Optional

- DVD-ROM Drive (12.7mmH)
- CD-RW Drive (12.7mmH)
- Combination Drive (DVD-ROM and CD-RW, 12.7mmH)
- USB FDD
- Software DVD player
- Software RW writer
- Lithium-Ion smart battery pack (9 cell)

External Locator - Top Views

Figure 1 - 1
Top Views

1. LCD
2. LED Power & E-Mail Indicators
3. Close Cover Switch
4. Speakers
5. Hot-Key buttons
6. LED Status Indicators
7. Power Button
8. Keyboard
9. TouchPad and Buttons
10. Palm Rest (Removable)
11. LCD Latch

Model Differences

This manual refers to the three notebook models pictured on this page.

The models vary slightly in external design. Photographs used throughout this manual are of Model B.

Model A Model B Model C

External Locator - Front & Left Views

Figure 1 - 2
Front View

1. LCD Latch

Figure 1 - 3
Left Side View

1. Security Lock
2. Vent

External Locator - Right & Rear Views

Figure 1 - 4
Right Side View

1. Microphone-In Jack
2. Headphone-Out Jack
3. S/PDIF Out Port
4. Mini IEEE 1394 Port
5. 3 USB Ports
6. PC Card Slot
7. PC Card Eject Button
8. CD Device
9. Infrared Port

Figure 1 - 5
Rear View

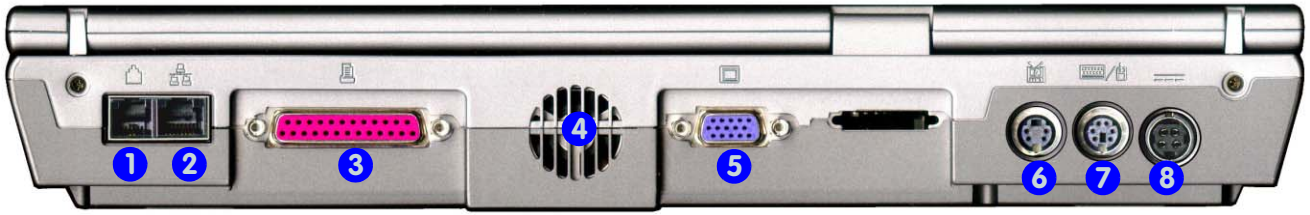

1. RJ-11 Phone Jack
2. RJ-45 LAN Jack
3. Parallel Port
4. Vent/Fan Outlets
5. External Monitor (CRT) Port
6. S-Video Port
7. PS/2 Type Port
8. DC-In Jack

External Locator - Bottom View

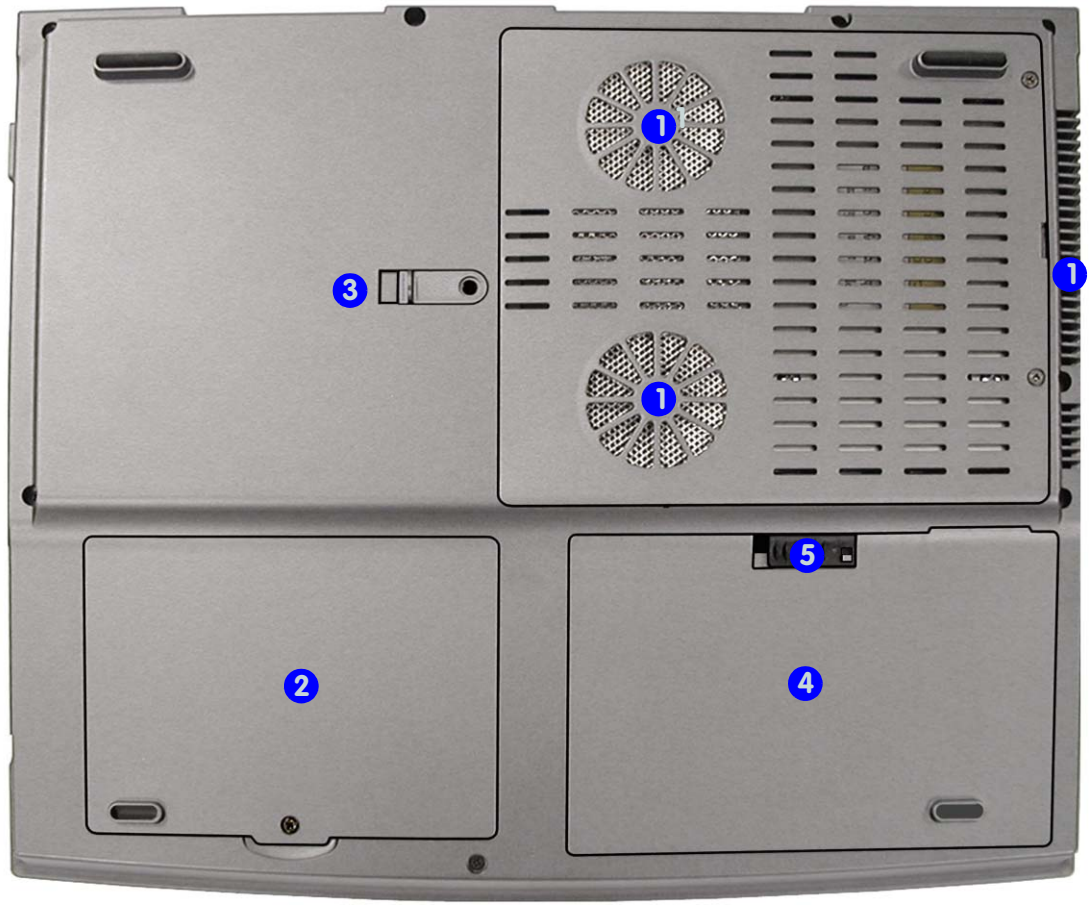

Figure 1 - 6
Bottom View

1. Vent/Fan Outlets
2. HDD Bay
3. CD Device Release Latch
4. Battery
5. Battery Release Latch

Overheating

To prevent your computer from overheating make sure nothing blocks the vent/fan outlets while the computer is in use.

2: Disassembly

Overview

This chapter provides step-by-step instructions for disassembling parts and subsystems. When it comes to reassembly, reverse the procedures (unless otherwise indicated).

We suggest you completely review any procedure before you take the computer apart.

Procedures such as upgrading/replacing the RAM, CD device and hard disk are included in the User's Manual but are repeated here for your convenience.

To make the disassembly process easier each section may have a box in the page margin. Information contained under the figure # will give a synopsis of the sequence of procedures involved in the disassembly procedure. A box with a lists the relevant parts you will have after the disassembly process is complete. **Note**: The parts listed will be for the disassembly procedure listed ONLY, and not any previous disassembly step(s) required. Refer to the part list for the previous disassembly procedure. The amount of screws you should be left with will be listed here also.

A box with a ☑ will provide any possible helpful information. A box with a contains warnings.

An example of these types of boxes are shown in the sidebar.

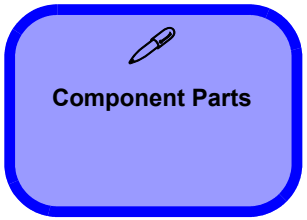

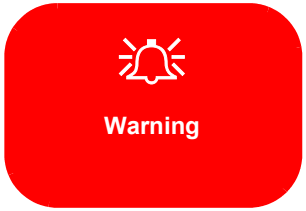

NOTE: All disassembly procedures assume that the system is turned **OFF**, and disconnected from any power supply (the battery is removed too).

Maintenance Tools

The following tools are recommended when working on the notebook PC:

- M3 Philips-head screwdriver
- M2.5 Philips-head screwdriver (magnetized)
- M2 Philips-head screwdriver
- Small flat-head screwdriver
- Pair of needle-nose pliers
- Anti-static wrist-strap

Connections

Connections within the computer are one of four types:

Locking collar sockets for ribbon connectors	To release these connectors, use a small flat-head screwdriver to gently pry the locking collar away from its base. When replacing the connection, make sure the connector is oriented in the same way. The pin1 side is usually not indicated.
Pressure sockets for multi-wire connectors	To release this connector type, grasp it at its head and gently rock it from side to side as you pull it out. Do not pull on the wires themselves. When replacing the connection, do not try to force it. The socket only fits one way.
Pressure sockets for ribbon connectors	To release these connectors, use a small pair of needle-nose pliers to gently lift the connector away from its socket. When replacing the connection, make sure the connector is oriented in the same way. The pin1 side is usually not indicated.
Board-to-board or multi-pin sockets	To separate the boards, gently rock them from side to side as you pull them apart. If the connection is very tight, use a small flat-head screwdriver - use just enough force to start.

Maintenance Precautions

The following precautions are a reminder. To avoid personal injury or damage to the computer while performing a removal and/or replacement job, take the following precautions:

1. **Don't drop it**. Perform your repairs and/or upgrades on a stable surface. If the computer falls, the case and other components could be damaged.
2. **Don't overheat it**. Note the proximity of any heating elements. Keep the computer out of direct sunlight.
3. **Avoid interference**. Note the proximity of any high capacity transformers, electric motors, and other strong magnetic fields. These can hinder proper performance and damage components and/or data. You should also monitor the position of magnetized tools (i.e. screwdrivers).
4. **Keep it dry**. This is an electrical appliance. If water or any other liquid gets into it, the computer could be badly damaged.
5. **Be careful with power**. Avoid accidental shocks, discharges or explosions.
   - Before removing or servicing any part from the computer, turn the computer off and detach any power supplies.
   - When you want to unplug the power cord or any cable/wire, be sure to disconnect it by the plug head. Do not pull on the wire.
6. **Peripherals** – Turn off and detach any peripherals.
7. **Beware of static discharge**. ICs, such as the CPU and main support chips, are vulnerable to static electricity. Before handling any part in the computer, discharge any static electricity inside the computer. When handling a printed circuit board, do not use gloves or other materials which allow static electricity buildup. We suggest that you use an anti-static wrist strap instead.
8. **Beware of corrosion**. As you perform your job, avoid touching any connector leads. Even the cleanest hands produce oils which can attract corrosive elements.
9. **Keep your work environment clean**. Tobacco smoke, dust or other air-born particulate matter is often attracted to charged surfaces, reducing performance.
10. **Keep track of the components**. When removing or replacing any part, be careful not to leave small parts, such as screws, loose inside the computer.

Power Safety Warning

Before you undertake any upgrade procedures, make sure that you have turned off the power, and disconnected all peripherals and cables (including telephone lines). It is advisable to also remove your battery in order to prevent accidentally turning the machine on.

Cleaning

Do not apply cleaner directly to the computer, use a soft clean cloth.
Do not use volatile (petroleum distillates) or abrasive cleaners on any part of the computer.

Disassembly Steps

The following table lists the disassembly steps, and on which page to find the related information. **PLEASE PERFORM THE DISASSEMBLY STEPS IN THE ORDER INDICATED.**

To remove the Battery:

1. Remove the battery page 2 - 5

To remove the Hard Disk Drive:

1. Remove the battery page 2 - 5
2. Remove the hard disk drive assembly page 2 - 6

To remove the CD Device:

1. Remove the battery page 2 - 5
2. Remove the CD device page 2 - 7

To remove the Keyboard:

1. Remove the battery page 2 - 5
2. Remove the keyboard page 2 - 8

To remove the System Memory:

1. Remove the battery page 2 - 5
2. Remove the keyboard page 2 - 8
3. Remove the memory page 2 - 9

To remove the CPU:

1. Remove the battery page 2 - 5
2. Remove the CPU page 2 - 10

To remove the Bottom Case:

1. Remove the battery page 2 - 5
2. Remove the hard disk drive assembly page 2 - 6
3. Remove the CD device page 2 - 7
4. Remove the keyboard page 2 - 8
5. Remove the CPU page 2 - 10
6. Remove the bottom case page 2 - 12

Removing the Battery

1. Shut the computer down and turn it over.
2. Locate the battery release latch 1 in **Figure 2 - 1a**.
3. Push the lock switch 1 on the latch in the direction indicated by arrow 2 in **Figure 2 - 1b**.
4. Slide the battery release latch towards the unlock symbol as indicated by arrow 3 in **Figure 2 - 1b**.
5. The battery will pop-up and can be lifted out of the computer.

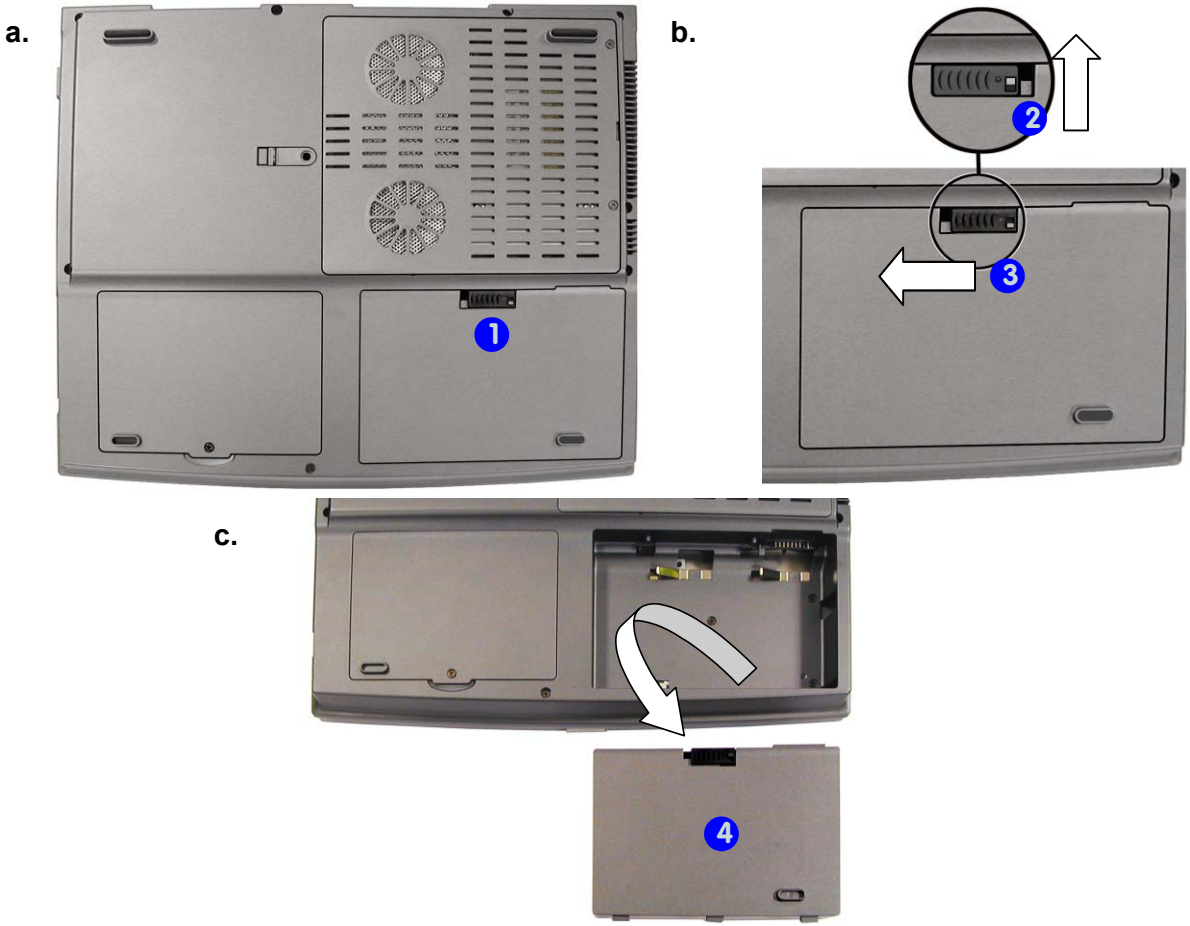

Figure 2 - 1
Battery Removal Sequence

a. Locate the release latch.
b. Slide the battery release latch to the unlock position.
c. The battery will pop-up. Remove the battery.

4. Battery

Removing the Hard Disk Drive Assembly

1. Turn the computer **OFF** and remove the battery (**see page 2 - 5**).
2. Remove screw 1 (**Figure 2 - 2a**).
3. Slide the HDD assembly in the direction of the arrow (**Figure 2 - 2c**), then lift it up out of the computer.
4. Remove screws 2 - 5 (**Figure 2 - 2e**) from the assembly, and separate the hard disk from the case.

Figure 2 - 2
Hard Disk Removal Sequence

a. Remove the HDD cover screw.
b. Remove the cover.
c. Slide the HDD assembly in the direction of the arrow.
d. Lift the HDD assembly out of the computer.
e. Remove the screws and separate the HDD from the case.

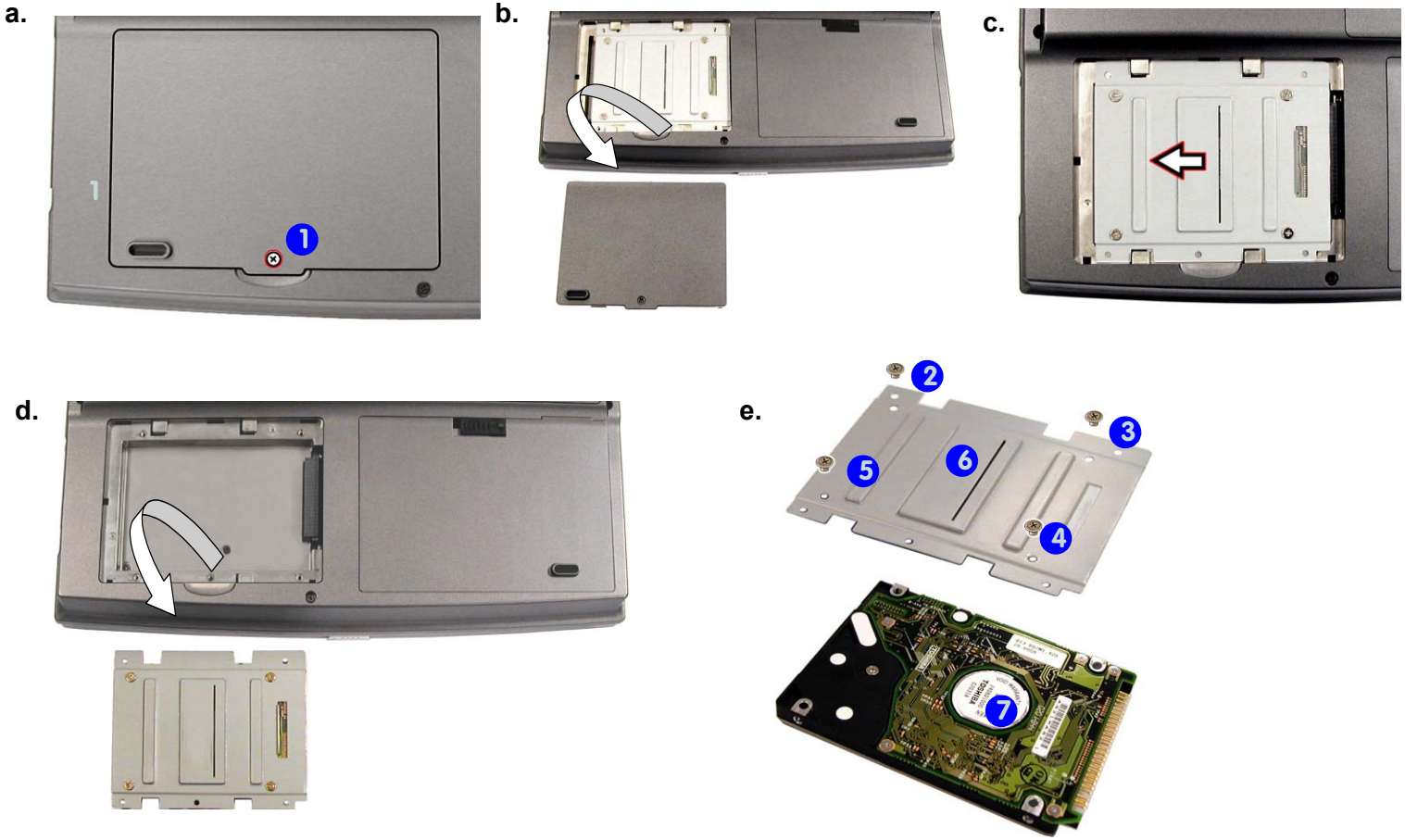

6. HDD case
7. HDD

- 5 Screws

Removing the CD Device

1. Turn **OFF** the computer and remove the battery (**see page 2 - 5**).
2. Remove screw 1 (**Figure 2 - 3a**)
3. Apply gentle but firm pressure at point 2 (**Figure 2 - 3b**), and slide the device out of the computer.

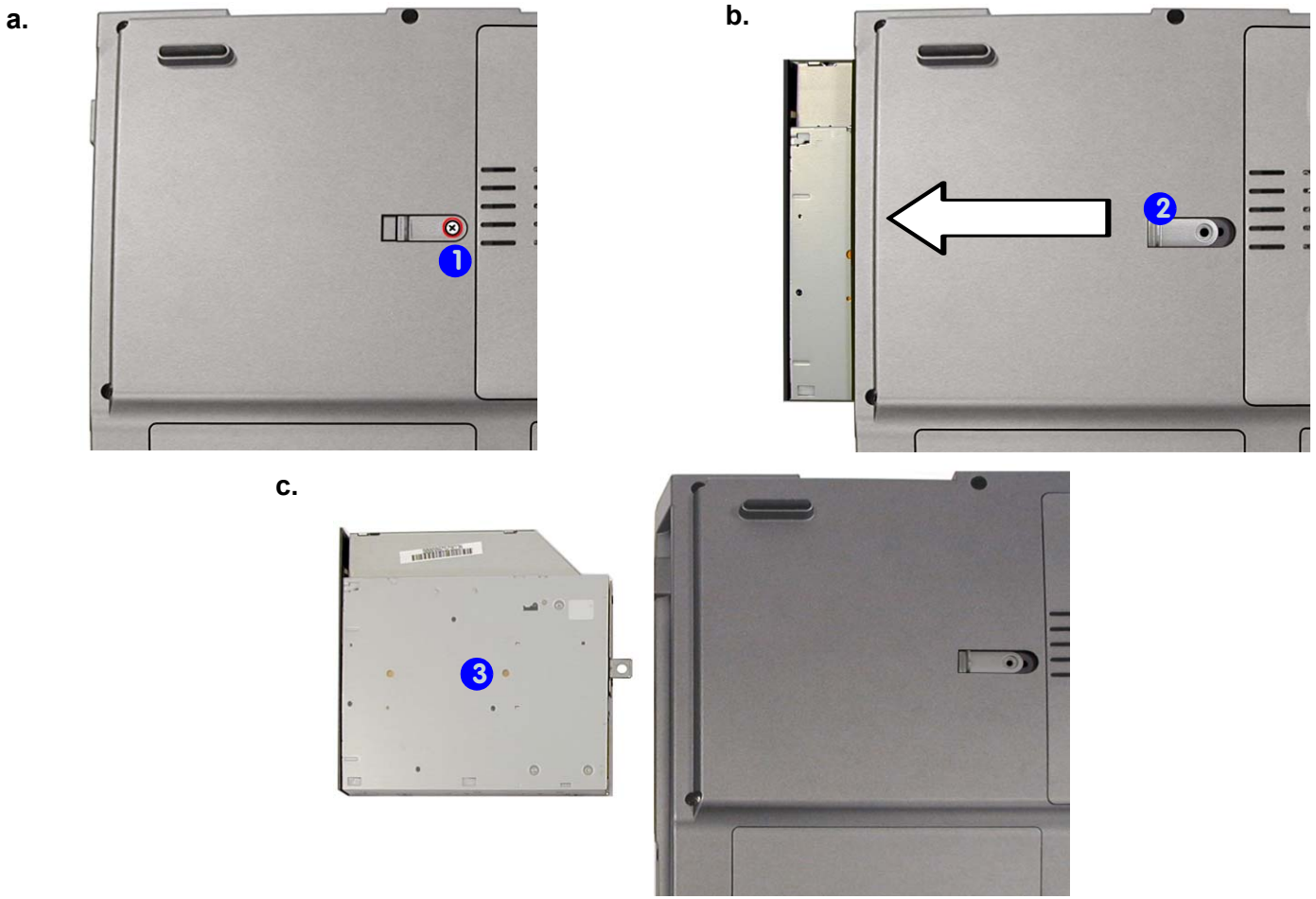

Figure 2 - 3
CD Device Removal Sequence

a. Remove the screw from the CD Device.
b. Apply pressure to the latch.
c. Slide the device out of the computer.

3. CD device
- 1 Screw

Figure 2 - 4
Keyboard Removal Sequence

a. Press the three latches to release the keyboard.
b. Lift the keyboard out and disconnect the cable from the locking collar.

Re-Inserting the Keyboard

When re-inserting the keyboard firstly align the **three** keyboard tabs (**Figure 2 - 4c**) at the bottom of the keyboard with the slots in the case.

5. Keyboard

Removing the Keyboard

1. Turn **OFF** the computer and remove the battery (**see page 2 - 5**).
2. Press the three keyboard latches at the top of the keyboard to elevate the keyboard from its normal position as in **Figure 2 - 4a** (you may need to use a small screwdriver to do this).
3. Carefully lift the keyboard up and out, being careful not to bend the keyboard ribbon cable 4 (**Figure 2 - 4b**).
4. Disconnect the keyboard ribbon cable from the locking collar socket..

a.

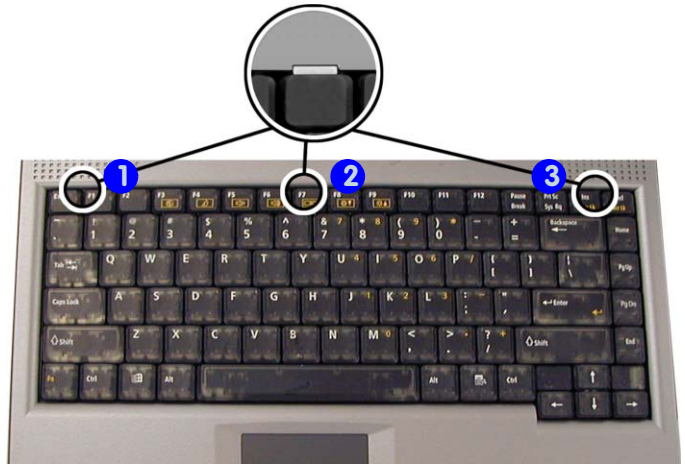

b.

c.

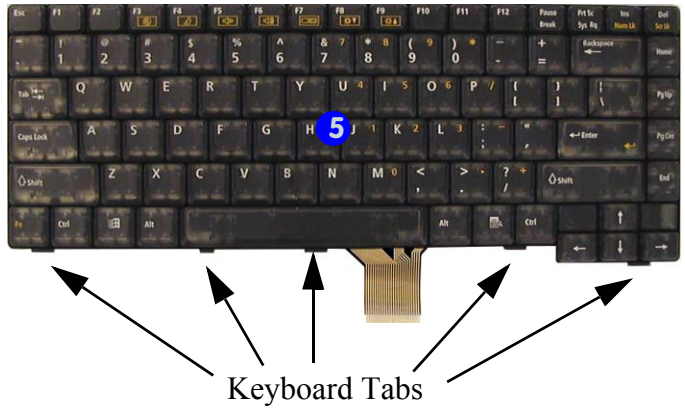

Removing the System Memory

1. Remove the battery (**see page 2 - 5**) and keyboard (**see page 2 - 8**).
2. Remove screws 2 - 9 (**Figure 2 - 5a**) from the shielding plate 1, and lift the plate up off the computer.
3. Locate the memory sockets 10 and 11 (**Figure 2 - 5c**), and gently pull latches 12 and 13 (**Figure 2 - 5c**) on the memory socket toward the sides of the computer as indicated in **Figure 2 - 5c**.
4. The module 14 (**Figure 2 - 5d**) will pop-up, and you can remove it.
5. Insert a new module holding it at about a 30° angle and fit the connectors firmly into the memory slot.

a.

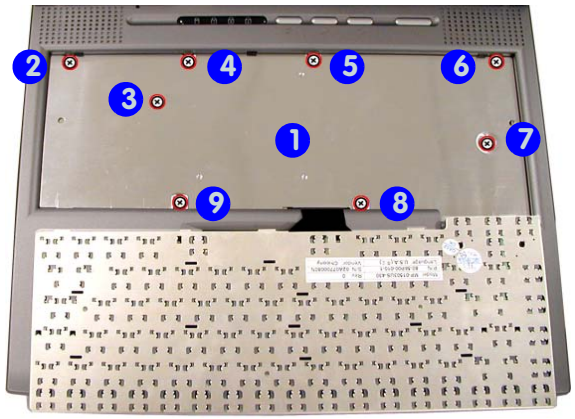

b.

c.

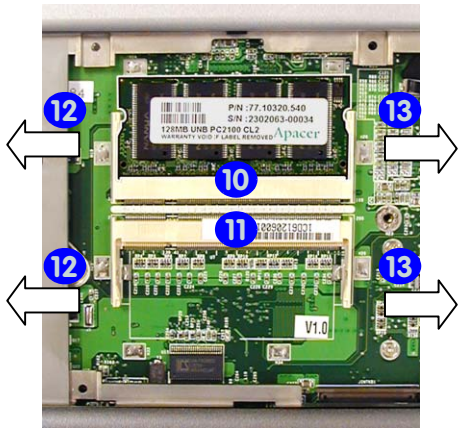

d.

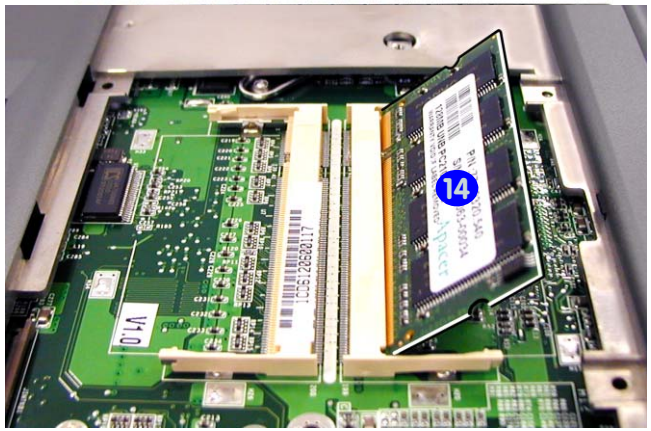

Figure 2 - 5
Memory Removal Sequence

a. Remove the screws from the shielding plate.
b. Remove the shielding plate.
c. Pull the latch(es) on the memory sockets to release the module(s).
d. When the module pops up, lift it out.

1.Shielding plate
14.Memory module(s)

- 8 Screws

Contact Warning

Be careful not to touch the metal pins on the module's connecting edge. Even the cleanest hands have oils which can attract particles, and degrade the module's performance.

Removing the CPU

1. Turn **OFF** the computer and remove the battery (**see page 2 - 5**).
2. Remove the screws 1 - 2 (**Figure 2 - 6**), and remove the CPU cover 3.

Figure 2 - 6
Processor Removal Sequence

Remove the two screws and the CPU cover.

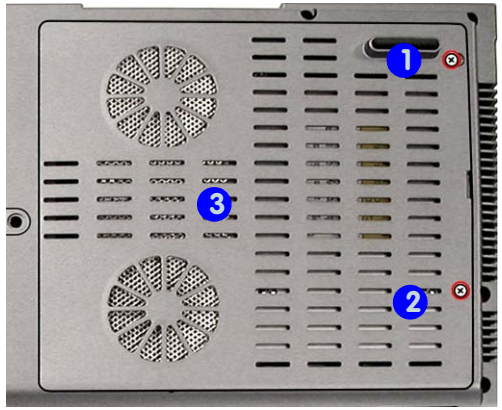

3. Remove the five screws from the heat sink in order 1 - 5 as indicated (**Figure 2 - 7**).

Figure 2 - 7
Processor Removal Sequence (cont'd)

Remove the five screws from the heat sink in **the order indicated**.

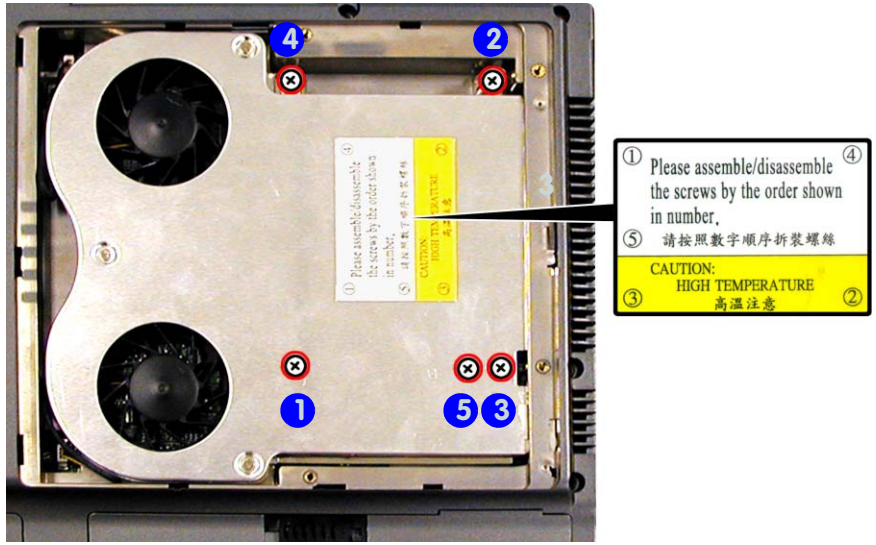

Caution

The heat sink, and CPU area in general, contains parts which are subject to high temperatures - Please allow the area time to cool before removing these parts).

Reassembly Screw Order

When inserting a new or replacement CPU, make sure you insert the screws in the same order indicated in **Figure 2 - 7**.

6. CPU cover

- 10 Screws

4. Use a screwdriver to apply pressure at point 2 (**Figure 2 - 8a**) in order to carefully slide the heat sink forward slightly, and prise the unit upwards.
5. Release the fan cables from points 3 - 4 (**Figure 2 - 8b**), and remove the heat sink.
6. Unlock the processor by raising lever 5 (**Figure 2 - 8c**) to the fully vertical position, and carefully lift the processor 6 off the socket.

Figure 2 - 8
Processor Removal Sequence (cont'd)

a. Slide the heat sink forward slightly, and prise the unit upwards.
b. Release the fan cables.
c. Unlock the CPU.
d. Remove the CPU.

a.

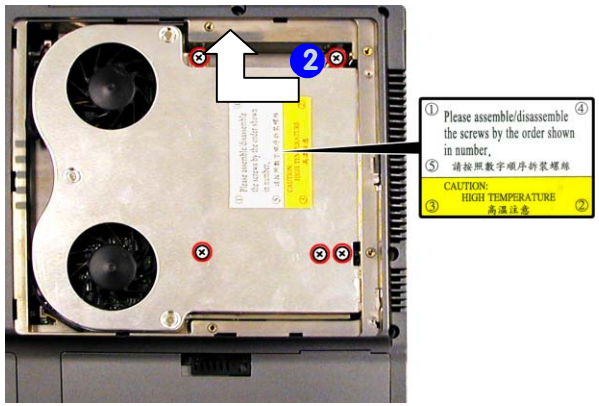

b.

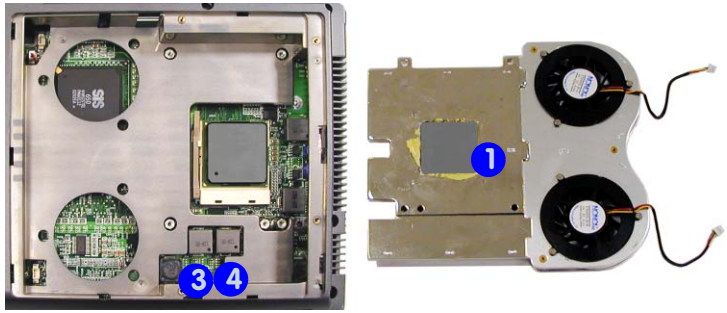

c.

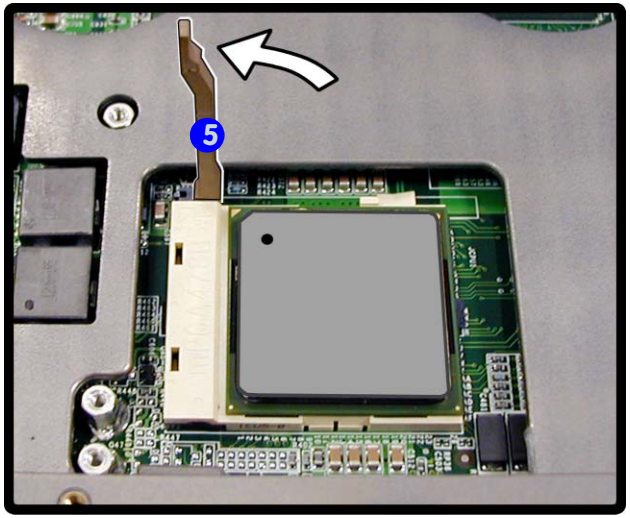

d.

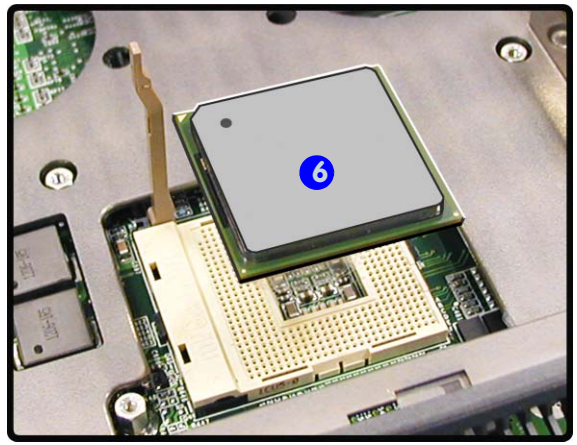

1. Heat sink
6. CPU

Figure 2 - 9
Bottom Case Removal Sequence

Remove the 13 screws from the bottom of the case.

Removing the Bottom Case

1. Remove the battery (**page 2 - 5**), hard disk assembly (**page 2 - 6**), CD device (**page 2 - 7**), keyboard (**page 2 - 8**), and CPU (**page 2 - 10**).
2. Turn the computer over and remove screws 1 - 13 (**Figure 2 - 9**).

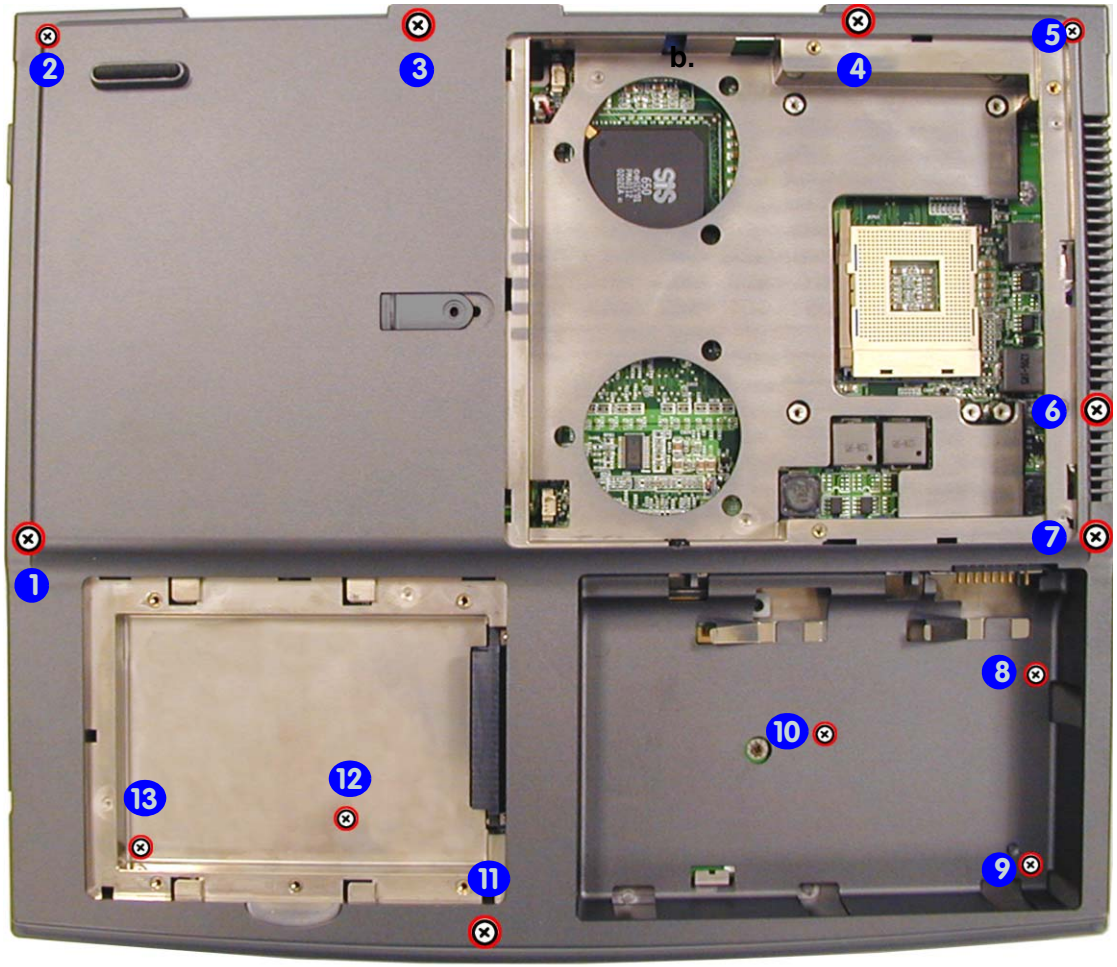

- 13 Screws

3. Turn the computer around and remove screws 1 - 2 (**Figure 2 - 10**) from the rear of the computer.

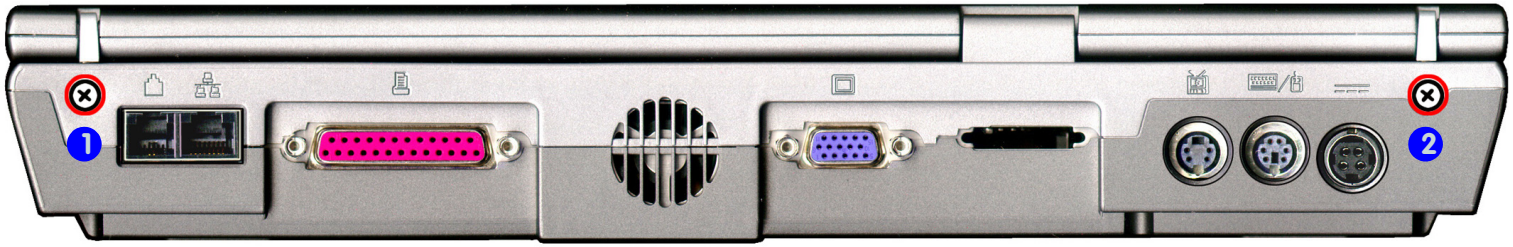

Figure 2 - 10
Bottom Case Removal Sequence (cont'd)

Remove the two screws from the rear of the computer.

4. Remove screw 1 and disconnect the touchpad cable 2, LCD cable 3, Inverter cable 4, Modem module 5 (if included) and speaker cable 6 (**Figure 2 - 11**).
5. Carefully lift the LCD and top case assembly 7 off the bottom case assembly 8.

a.

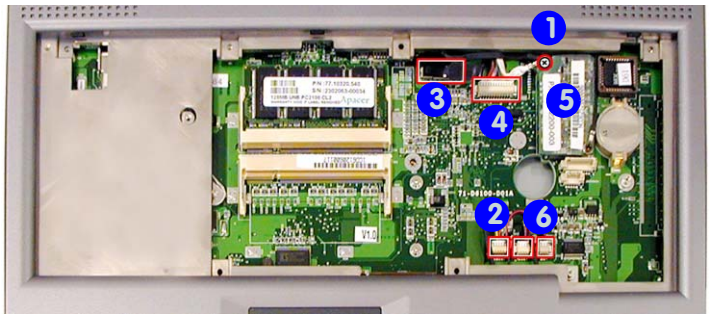

b.

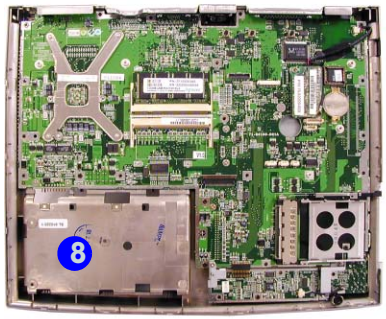

Figure 2 - 11
Bottom Case Removal Sequence (cont'd)

a. Remove the screw and the cables connected to the mainboard.
b. Lift the LCD and top case off the bottom

7. LCD & Top Case
8. Bottom Case

- 3 Screws

Appendix A:Part Lists

This appendix breaks down the notebook PC's construction into a series of illustrations. The component part numbers are indicated in the tables opposite the drawings.

Note: This section indicates the *manufacturer's* part numbers. Your organization may use a different system, so be sure to cross-check any relevant documentation.

Note: Some assemblies may have parts in common (especially screws). However, the part lists DO NOT indicate the total number of duplicated parts used.

Note: Be sure to check any update notices. The parts shown in these illustrations are appropriate for the system at the time of publication. Over the product life, some parts may be improved or re-configured, resulting in *new* part numbers.

Part List Illustration Location

The following table indicates where to find the appropriate part list illustration.

Table 1
Part List Illustration Location

Part	D610S	D630S
Top	Page A - 3	Page A - 14
Bottom	Page A - 4	Page A - 15
LCD 14"	Page A - 5	Page A - 16
LCD 15"	Page A - 6	Page A - 17
Battery	Page A - 7	Page A - 18
Samsung CD-ROM	Page A - 8	Page A - 19
TEAC CD-ROM	Page A - 9	Page A - 20
KME CD-RW	Page A - 10	Page A - 21
Combo	Page A - 11	Page A - 22
Toshiba DVD-ROM	Page A - 12	Page A - 23
HDD	Page A - 13	Page A - 24

Top (D610S)

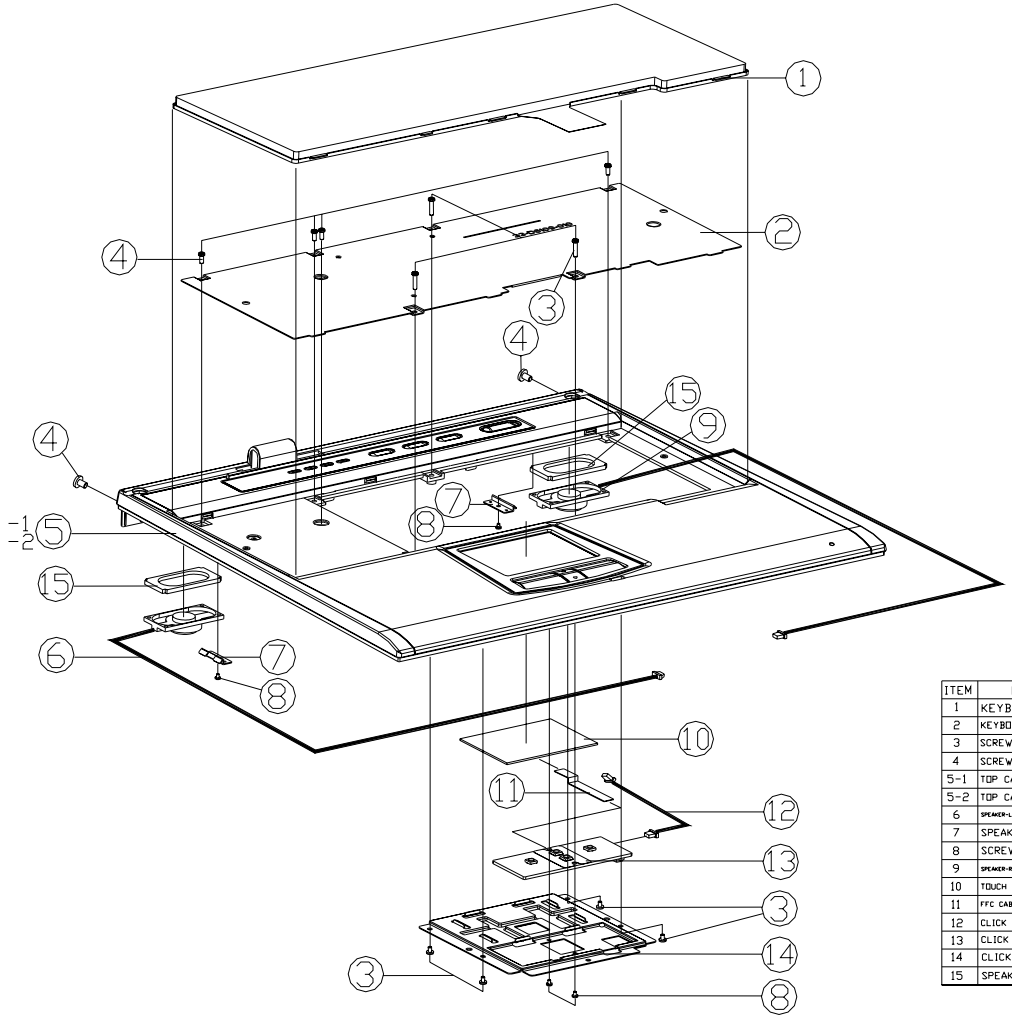

Figure 1
Top (D610S)

ITEM	PART NAME	PART NO	REMARK
1	KEYBOARD	80-56P08-7G0	
2	KEYBOARD SHIELDING FOR D610S	33-D6109-012	
3	SCREW M2.5*8L K1 BN1 ICT NY	35-B9125-8R0	
4	SCREW M2.5*5L K1 BN1 ICT NY	35-B9125-5R0	
5-1	TOP CASE MODULE FOR D610S 14"	39-D6102-011	
5-2	TOP CASE MODULE FOR D610S 15"	39-D6102-111	
6	SPEAKER-L 40×20×8t 1φ 8ohm 415MM W/CABLE×[illegible]	23-5A410-411-1	
7	SPEAKER BRACKET FOR D610S	33-D610T-020	
8	SCREW M2.0*5L K1 BN ICT NY	35-B9120-4RA	
9	SPEAKER-R 40×20×8t 1φ 8ohm 275MM W/CABLE×[illegible]	23-5A410-271-1	
10	TOUCH PAD SYNAPTICS TM41PDG351-1	49-42002-010	
11	FFC CABLE FOR TOUCH PAD TO SWITCH BD	43-8880S-010	
12	CLICK BOARD CABLE FOR D610S	43-D6102-010	
13	CLICK BOARD	77-D6102-D02	
14	CLICK BRACKET FOR D610S	33-D6102-010	
15	SPEAKER RUBBER FOR D610S	47-D613T-010	

Bottom (D610S)

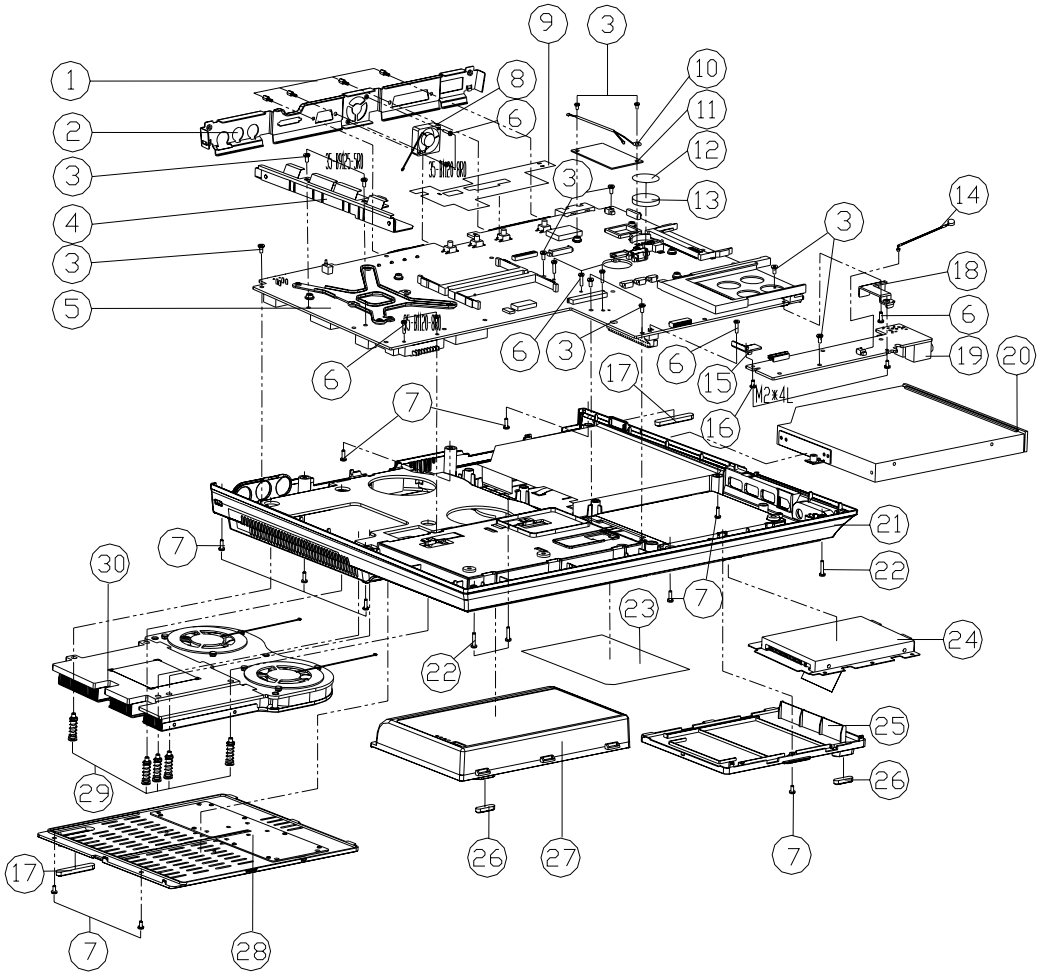

Figure 2
Bottom (D610S)

ITEM	PART NAME	PART NO	REMARK
1	HEX STUD (SUM22 NI-PL) 11MM	34-07009-011-A	
2	IO BRACKET	33-D620S-011	
3	SCREW M2.5*5L KI BNI ICT NY	35-B9125-5R0	
4	SHIELD VENT FOR SAFETY FOR D610S	33-D6103-020	
5	MAIN BOARD	77-D6100-D0X	
6	SCREW M2*8L KI NI ICT	35-B1120-8R0	
7	SCREW M2.5*8L KI BNI ICT NY	35-B9125-8R0	
8	FAN 25*25*6.5T	23-A2514-050	
9	MYLAR FOR LED CABLE	40-D6252-011	
10	MDC CABLE FOR D610S	43-D610Z-011	
11	MDC MODEM MODULE	76-32200-003	
12	MYLAR FOR BATTERY	40-8505M-010	
13	BATTERY 3V 210mA CR2032	23-62015-407	
14	MIC (ECM-6B)	23-E0610-55A	
15	AUDIO BRACKET(L)	33-D6208-010	
16	SCREW M2*4L KI BNI ICT NY	35-B9120-4RA	
17	RUBBER BACK FOOT	47-D6211-021	
18	AUDIO BRACKET(R)	33-D6208-010	
19	AUDIO BOARD	77-D6108-D0X	
20	CD-ROM ASS'Y (OPTION)	79-D612Z-000	Reference Ass'y Bag (99-D6155-050)
20	DVD ASS'Y (OPTION)	79-D612V-000	Reference Ass'y Bag (99-D6155-060)
20	CD-RW ASS'Y (OPTION)	79-D612W-000	Reference Ass'y Bag (99-D6155-070)
20	COMBO ASS'Y (OPTION)	79-D612X-000	Reference Ass'y Bag (99-D6155-080)
21	BOTTOM CASE MODULE FOR D610S	39-D6103-011	
22	SCREW M2.5*12L KI BK/Z ICT	35-B6125-120	
23	PRODUCT LABEL FOR D610S(TUV)	45-D6103-010	
24	W/O HDD ASS'Y	79-D612I-000	Reference Ass'y Bag (99-D6155-090)
25	HDD COVER FOR D610S	42-D6171-020	
26	RUBBER FRONT FOOT	47-D6211-011	
27	BATTERY (OPTION)	79-D612M-000	Reference Ass'y Bag (99-D6155-100)
28	CPU COVER MODULE FOR D610S	42-D6179-100	
29	SCREW M2.5*0.45P*17 B NI ICT NY	35-41025-175	
30	CPU HEATSINK MODULE	31-56P0N-101	

LCD 14" (D610S)

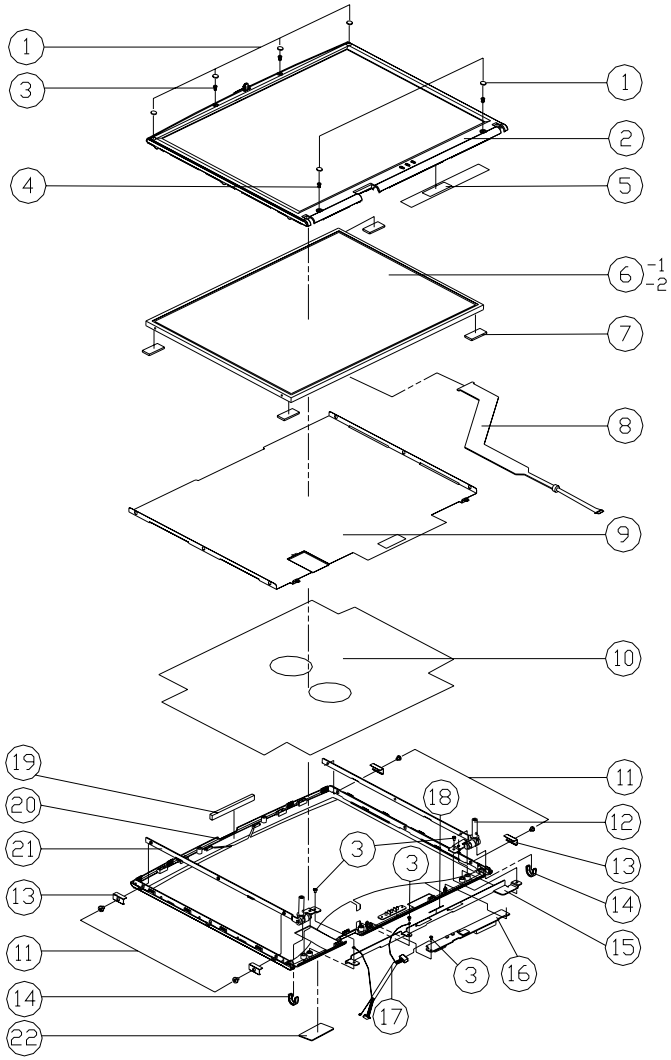

ITEM	PART NAME	PART NO	REMARK
1	LCD F-CVR RUBBER SILICONE	47-32001-020	
2	FRONT COVER MODULE FOR D610S 14"	39-D6101-010	QUANTA/IBM
3	SCREW M2*4L KI BNI ICT NY	35-B9120-4RA	
4	SCREW M2.5*5L KI BNI ICT NY	35-B9125-5R0	
5	鋁箔 FOR LCD FRONT COVER	40-42031-010	
6-1	LCD T QDI QD141X1LH03A 14.1" XGA 6.0mm	50-J2260-Q00	QUANTA
6-2	LCD T IBM ITXG77-E53-029 14.1" XGA	50-J2287-E01	IBM
7	LCD PORON 16X16X0.7mm	47-D6191-020	
8	LCD CABLE 14.1" FOR QUANTA-QD141X1LH03 D610S	43-D6101-030	QUANTA/IBM
9	LCD SHIELDING PLATE FOR 14.1"	40-42001-010	
10	MYLAR (295*220 BK) FOR 27C/S BACK COVER	40-00151-031	
11	SCREW M2*2L KI BZ ICT NY	35-B6120-2R0	
12	LCD HINGE-R 14.1" FOR 4200	33-42001-021	
13	LCD CLAMPING FOR 4200	33-42001-040	
14	HINGE COVER FOR D610S	42-D617Y-011	
15	LCD BRACKET FOR QUANTA 14.1"	33-42001-051-1	
16	INVERTER BOARD FOR D610S	77-4200R-D02-1	
17	INVERTER CABLE FOR D610S	43-D610R-010	
18	RUBBER (25*2*0.5)	47-00120-255	
19	SPONGE (60*7*3T)	47-00191-600	
20	BACK COVER MODULE FOR D610S 14"	39-D6101-020	
21	LCD HINGE-L 14.1"FOR 4200	33-42001-031	
22	NAME PLATE "NOTEBOOK"	45-42001-010	

Figure 3
LCD 14" (D610S)

LCD 15" (D610S)

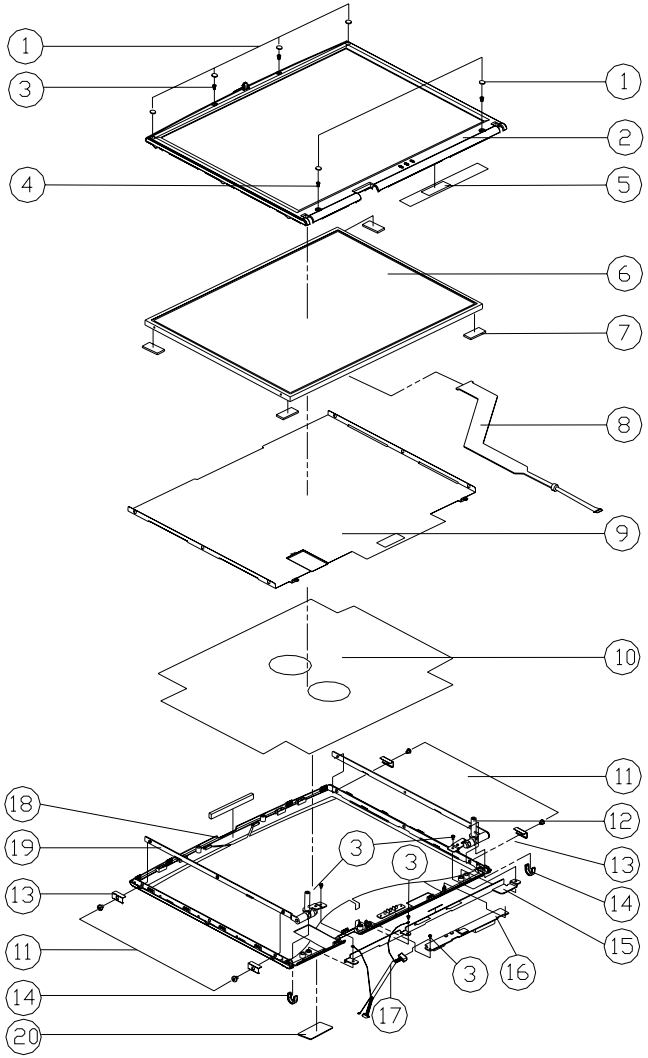

Figure 4
LCD 15" (D610S)

ITEM	PART NAME	PART NO	REMARK
1	LCD F-CVR RUBBER SILICONE	47-32001-020	
2	FRONT COVER MODULE FOR D610S 15"	39-D6101-110	LG
3	SCREW M2*4L KI BNI ICT NY	35-B9120-4RA	
4	SCREW M2.5*5L KI BNI ICT NY	35-B9125-5R0	
5	鋁箔 FOR LCD FRONT COVER	40-42031-010	
6	LCD 15" LG TFT LP150X04 XGA 6.5mm	50-L2265-L00	LG
7	LCD PORON 16X16X2.0mm	47-D6191-040	
8	LCD CABLE FOR 15" LG-LP150X04 D610S	43-D6101-040	LG
9	LCD BACK COVER 鋁箔FOR 4200 15"	40-42031-111	
10	MYLAR (295*220 BK) FOR 27C/S BACK COVER	40-00151-031	
11	SCREW M2*2L KI BZ ICT NY	35-B6120-2R0	
12	LCD HINGE LG 15" FOR RIGHT	33-D6101-120	
13	LCD CLAMPING FOR 4200	33-42001-040	
14	HINGE COVER	42-D627Y-011	
15	LCD BRACKET FOR LG 15"	33-D6101-010	
16	INVERTER BOARD FOR D610S	77-4200R-D02-1	
17	INVERTER CABLE FOR D610S	43-D610R-010	
18	BACK COVER MODULE FOR D610S 15"	39-D6101-120	
19	LCD HINGE 15" LEFT	33-D6101-130	
20	NAME PLATE "NOTEBOOK"	45-42001-010	

Battery (D610S)

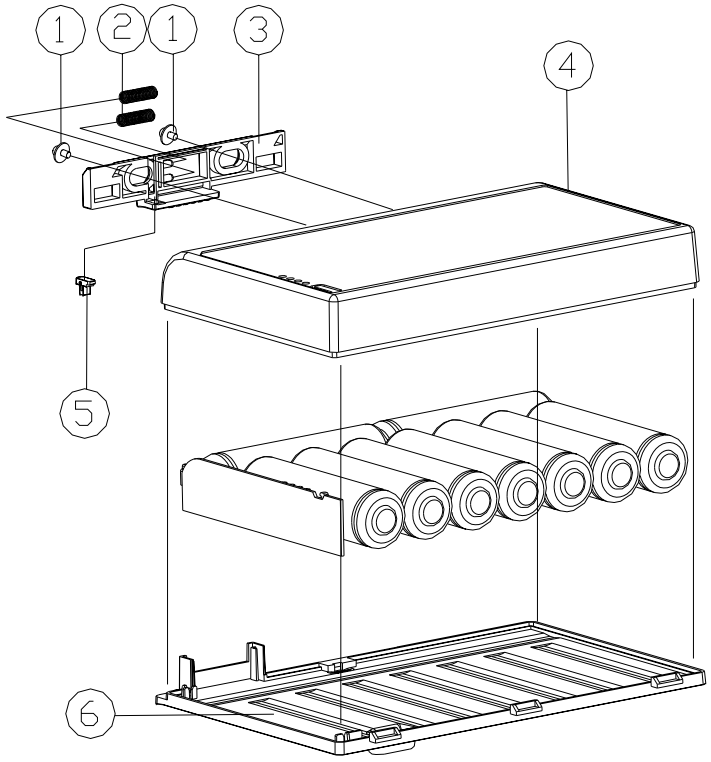

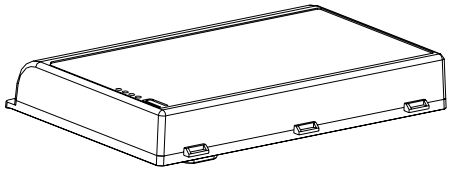

ITEM	PART NAME	PART NO	REMARK
1	SCREW M2*2.5L P NI ICT W/WASHER	35-01020-2RE	
2	SPRING FOR BATTERY	38-D610M-020	
3	HOOK FOR BATTERY FOR D610S	42-D61AM-011	
4	BATTERY TOP CASE FOR D610S	42-D617M-021	
5	HOOK LOCK KNOB FOR BATTERY FOR D610S	42-D618M-010	
6	BATTERY BOTTOM CASE FOR D610S	42-D617M-011	

Figure 5
Battery (D610S)

Samsung CD-ROM Drive (D610S)

Figure 6
Samsung CD-ROM (D610S)

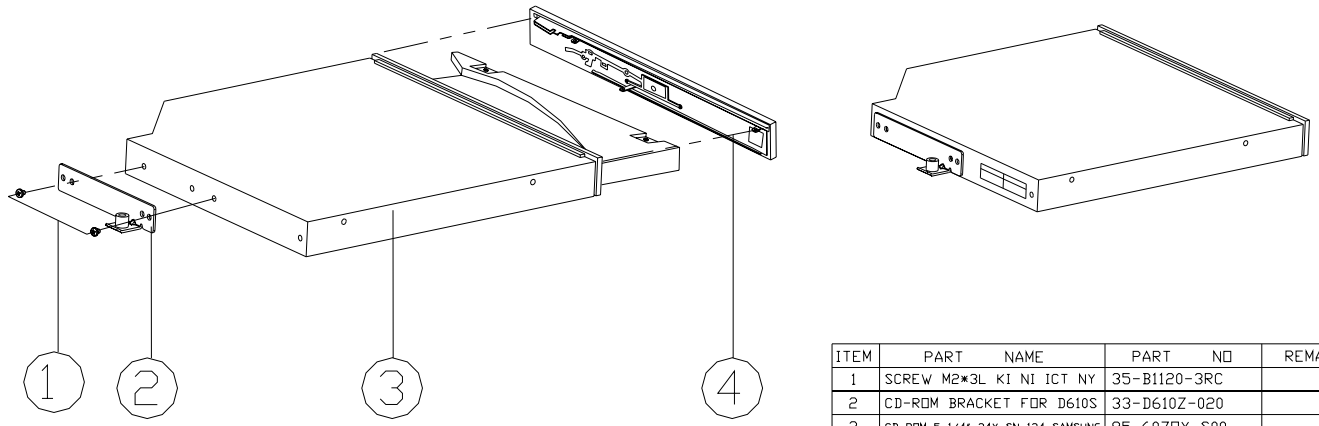

ITEM	PART NAME	PART NO	REMARK
1	SCREW M2*3L KI NI ICT NY	35-B1120-3RC	
2	CD-ROM BRACKET FOR D610S	33-D610Z-020	
3	CD-ROM 5 1/4" 24X SN-124 SAMSUNG	85-607□X-S00	
4	CD-ROM BEZEL MODULE FOR SAMSUNG	42-D617Z-100	

TEAC CD-ROM Drive (D610S)

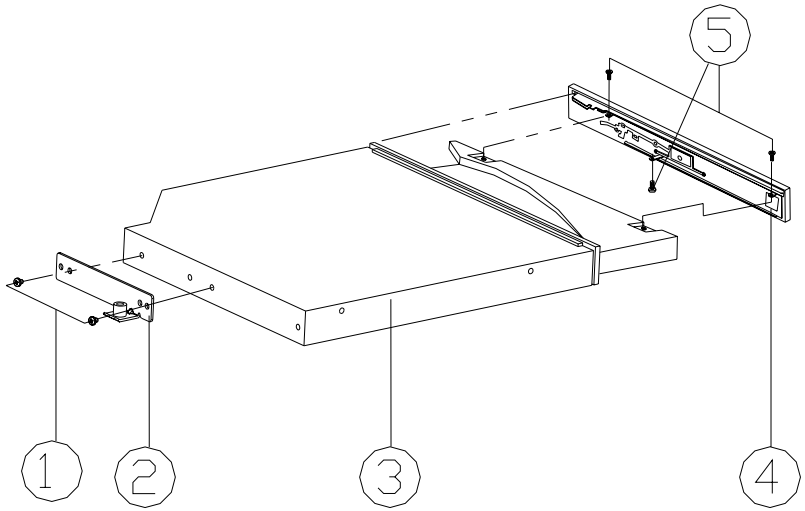

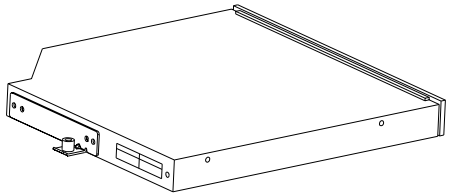

ITEM	PART NAME	PART NO	REMARK
1	SCREW M2*4L K1 NI ICT NY	35-B9120-4RA	
2	CD-ROM BRACKET FOR D610S	33-D610Z-020	
3	CD-ROM 5 1/4" 24X SN-124 SAMSUNG	85-607□X-S00	
4	CD-ROM BEZEL MODULE FOR TEAC	42-D617Z-200	
5	SCREW M2*5L K1 BK/□ TAP	35-B4920-5R0	

Figure 7
TEAC CD-ROM (D610S)

KME CD-RW Drive (D610S)

Figure 8
KME CD-RW Drive (D610S)

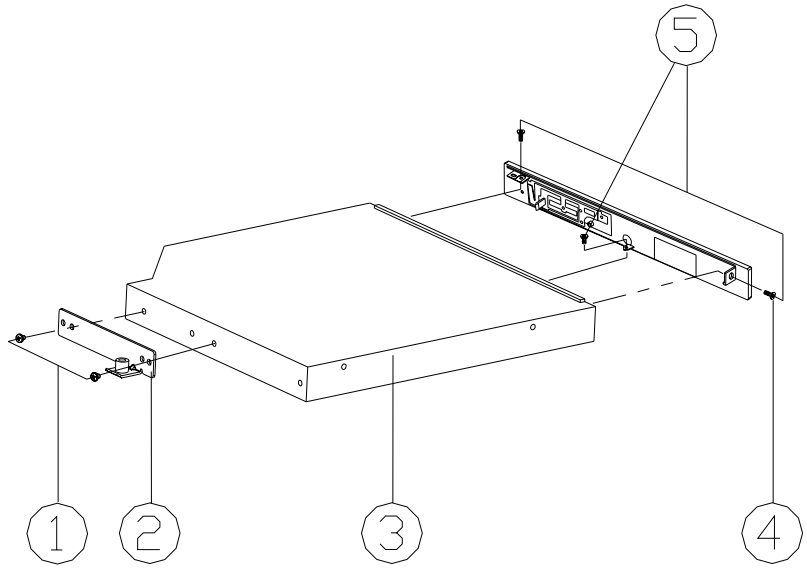

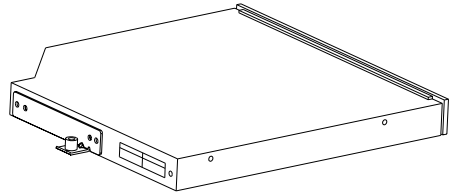

ITEM	PART NAME	PART NO	REMARK
1	SCREW M2*4L KI BNI ICT NY	35-B9120-4RA	
2	CD-ROM BRACKET FOR D610S	33-D610Z-020	
3	CD-RW 5 1/4" 8X UJDA-340 12.7mm KME	85-8078X-K01	
4	CD-RW BEZEL MODULE FOR KME UJDA340CL	42-D617W-100	
5	SCREW M1.7*2.5L K BZ AEFT	35-86517-2R5	

Combo Drive (D610S)

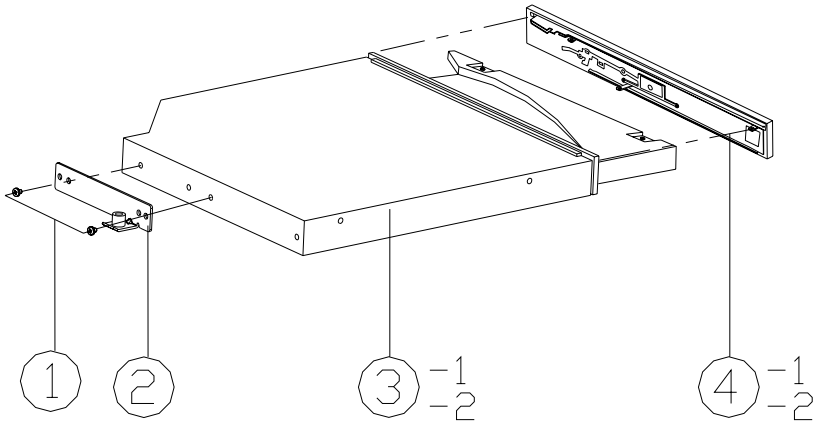

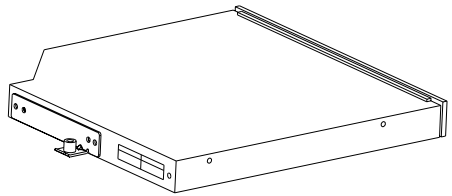

ITEM	PART NAME	PART NO	REMARK
1	SCREW M2*4L KI BNI ICT NY	35-B9120-4RA	
2	CD-ROM BRACKET FOR D610S	33-D610Z-020	
3-1	CD-RW/DVD 5 1/4" 8X 12.7mm SD-R2102 TOSHIBA	85-9078X-T00	
3-2	CD-RW/DVD 5 1/4" 8X 12.7mm DW-28E-B2 TEAC	85-9078X-700	
4-1	TOSHIBA COMBO BEZEL MODULE FOR D610S	42-D617X-100	
4-2	TEAC COMBO BEZEL MODULE FOR D610S	42-D617X-200	

Figure 9
Combo Drive (D610S)

Toshiba DVD-ROM Drive (D610S)

Figure 10
Toshiba DVD-ROM Drive (D610S)

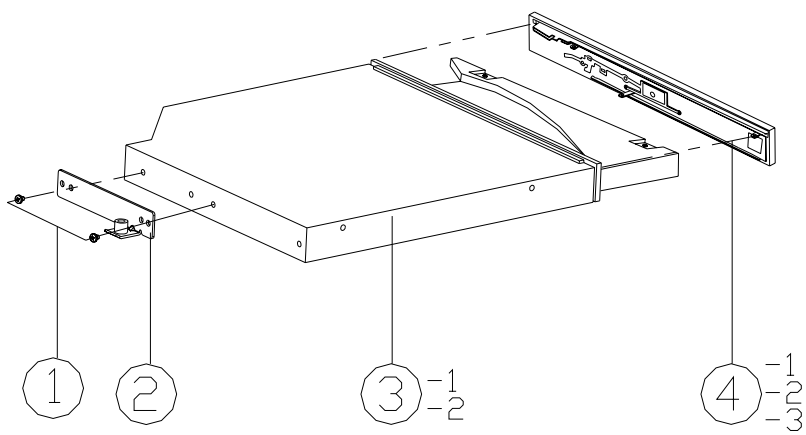

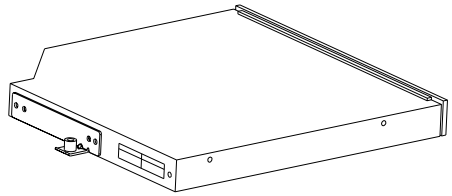

ITEM	PART NAME	PART NO	REMARK
1	SCREW M2*4L KI BNI ICT NY	35-B9120-4RA	
2	CD-ROM BRACKET FOR D610S	33-D610Z-020	
3-1	DVD 5 1/4" 8X 12.7mm SD-C2502 TOSHIBA	85-7078X-T02	
3-2	DVD 5 1/4" 8X 12.7mm DV-28E-B82 TEAC	85-7078X-700	
4-1	TOSHIBA DVD BEZEL MODULE FOR D610S	42-D617V-100	
4-2	TOSHIBA DVD BEZEL MODULE FOR D610S	42-D617V-200	
4-3	DVD BEZEL MODULE FOR TEAC	42-D617V-300	

Hard Disk Drive (D610S)

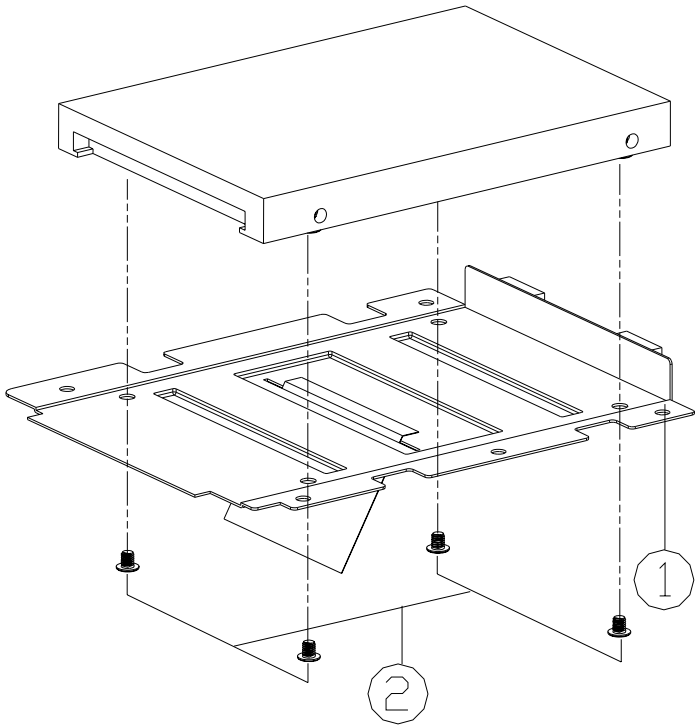

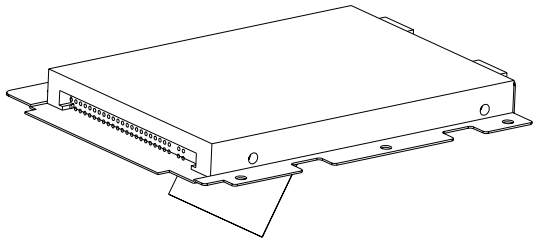

ITEM	PART NAME	PART NO	REMARK
1	HDD FRAME FOR D610S	33-D610I-010	
2	SCREW M3*4L K1 NI ICT NY	35-B1130-4R0	

Figure 11
Hard Disk Drive (D610S)

Top (D630S)

Figure 12
Top (D630S)

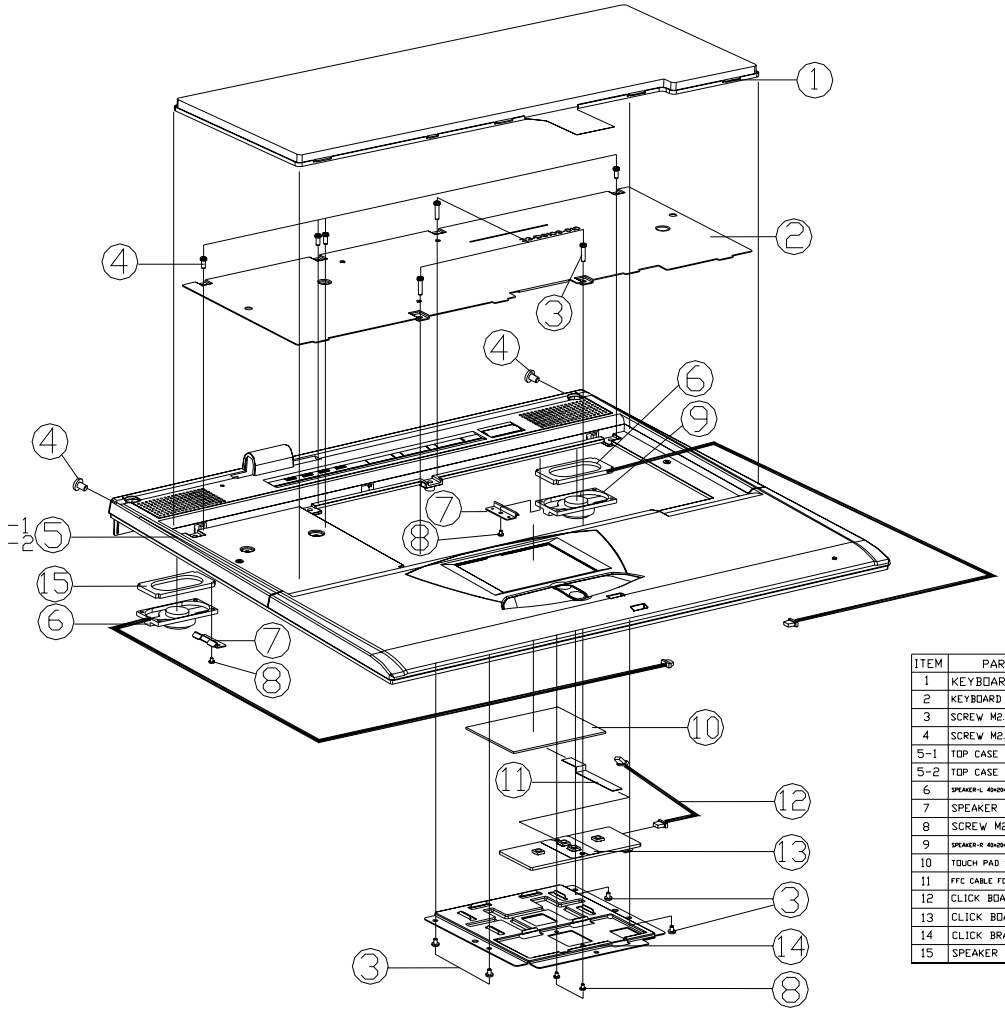

ITEM	PART NAME	PART NO	REMARK
1	KEYBOARD	80-56P08-7G0	
2	KEYBOARD SHIELDING FOR D610S	33-D6109-012	
3	SCREW M2.5*8L K1 BNI ICT NY	35-B9125-8R0	
4	SCREW M2.5*5L K1 BNI ICT NY	35-B9125-5R0	
5-1	TOP CASE MODULE FOR D630S 14"	39-D6302-011	
5-2	TOP CASE MODULE FOR D630S 15"	39-D6302-111	
6	SPEAKER-L 40*20*8t 1Ω 8ohm 400MW W/CABLE	23-5A410-411-1	
7	SPEAKER BRACKET FOR D610S	33-D610T-020	
8	SCREW M2.0*5L K1 BN ICT NY	35-B9120-4RA	
9	SPEAKER-R 40*20*8t 1Ω 8ohm 270MW W/CABLE	23-5A410-271-1	
10	TOUCH PAD SYNAPTICS TM41PDG351-1	49-42002-010	
11	FFC CABLE FOR TOUCH PAD TO SWITCH BD	43-8880S-010	
12	CLICK BOARD CABLE FOR D610S	43-D6102-010	
13	CLICK BOARD	77-D6102-D02	
14	CLICK BRACKET FOR D610S	33-D6102-010	
15	SPEAKER RUBBER FOR D610S	47-D61T3-010	

Bottom (D630S)

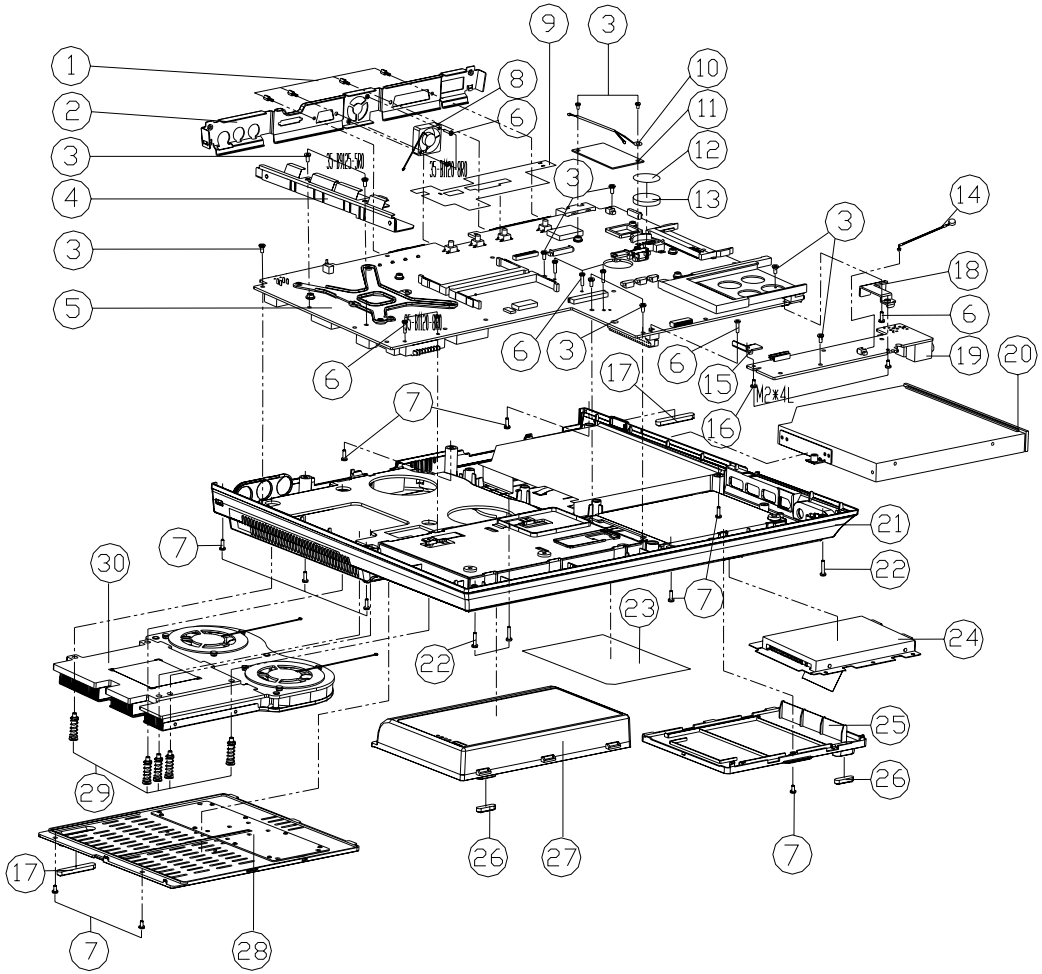

ITEM	PART NAME	PART NO	REMARK
1	HEX STUD (SUM22 NI-PL) 11MM	34-07009-011-A	
2	IO BRACKET	33-D620S-011	
3	SCREW M2.5*5L KI BNI ICT NY	35-B9125-5R0	
4	SHIELD VENT FOR SAFETY FOR D610S	33-D6103-020	
5	MAIN BOARD	77-D6100-D0X	
6	SCREW M2*8L KI NI ICT	35-B1120-8R0	
7	SCREW M2.5*8L KI BNI ICT NY	35-B9125-8R0	
8	FAN 25*25*6.5T	23-A2514-050	
9	MYLAR FOR LED CABLE	40-D6252-011	
10	MDC CABLE FOR D610S	43-D610Z-011	
11	MDC MODEM MODULE	76-32200-003	
12	MYLAR FOR BATTERY	40-8505M-010	
13	BATTERY 3V 210mA CR2032	23-62015-407	
14	MIC (ECM-6B)	23-E0610-55A	
15	AUDIO BRACKET(L)	33-D6208-010	
16	SCREW M2*4L KI BNI ICT NY	35-B9120-4RA	
17	RUBBER BACK FOOT	47-D6211-021	
18	AUDIO BRACKET(R)	33-D6208-010	
19	AUDIO BOARD	77-D6108-D0X	
20	CD-ROM ASS'Y (OPTION)	79-D632Z-000	Reference Ass'y Dwg (99-D63S5-050)
20	DVD ASS'Y (OPTION)	79-D632V-000	Reference Ass'y Dwg (99-D63S5-060)
20	CD-RW ASS'Y (OPTION)	79-D632W-000	Reference Ass'y Dwg (99-D63S5-070)
20	COMBO ASS'Y (OPTION)	79-D632X-000	Reference Ass'y Dwg (99-D63S5-080)
21	BOTTOM CASE MODULE FOR D630S	39-D6303-011	
22	SCREW M2.5*12L KI BK/Z ICT	35-B6125-120	
23	PRODUCT LABEL FOR D630S(TUV)	45-D6303-011	
24	W/O HDD ASS'Y	79-D6121-000	Reference Ass'y Dwg (99-D63S5-090)
25	HDD COVER FOR D630S	42-D6371-020	
26	RUBBER FRONT FOOT	47-D6211-011	
27	BATTERY (OPTION)	87-D638S-4E8	Reference Ass'y Dwg (99-D63S5-100)
28	CPU COVER MODULE FOR D630S	42-D6379-100	
29	SCREW M2.5*0.45P*17 B NI ICT NY	35-41025-175	
30	CPU HEATSINK MODULE	31-56P0N-101	

Figure 13
Bottom (D630S)

LCD 14" (D630S)

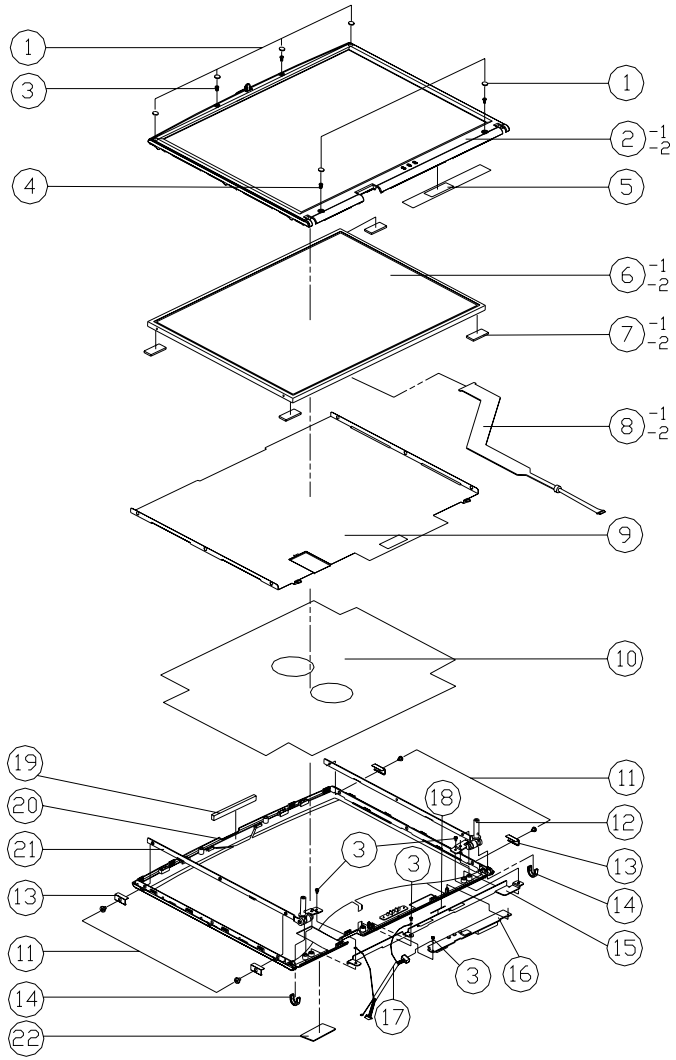

Figure 14
LCD 14" (D630S)

ITEM	PART NAME	PART NO	REMARK
1	LCD F-CVR RUBBER SILICONE	47-32001-020	
2-1	FRONT COVER MODULE FOR D630S 14"	39-D6301-010	QUANTA
2-2	FRONT COVER MODULE FOR D610S 14"	39-D6101-010	IBM
3	SCREW M2*4L KI BNI ICT NY	35-B9120-4RA	
4	SCREW M2.5*5L K1 BNI ICT NY	35-B9125-5R0	
5	鋁箔 FOR LCD FRONT COVER	40-42031-010	
6-1	LCD T QDI QDI41X1LH03A 14.1" XGA 6.0mm	50-J2260-Q00	QUANTA
6-2	LCD T IBM ITXG77-E53-029 14.1" XGA	50-J2287-E01	IBM
7-1	LCD PORON 16X16X0.7mm	47-D6191-020	QUANTA
7-2	LCD PORON 16X16X1.6mm	47-D6191-030	IBM
8-1	LCD CABLE 14.1" FOR QUANTA-QDI41X1LH03 D610S	43-D6301-030	QUANTA
8-2	LCD CABLE 14.1" FOR QUANTA-QDI41X1LH03 D630S	43-D6301-110	IBM
9	LCD SHIELDING PLATE FOR 14.1"	40-42001-010	
10	MYLAR (295*220 BK) FOR 27C/S BACK COVER	40-00151-031	
11	SCREW M2*2L KI BZ ICT NY	35-B6120-2R0	
12	LCD HINGE-R 14.1" FOR 4200	33-42001-021	
13	LCD CLAMPING FOR 4200	33-42001-040	
14	HINGE COVER FOR D630S	42-D637Y-011	
15	LCD BRACKET FOR CPT 14.1"	33-42001-051-1	
16	INVERTER BOARD FOR D610S	77-4200R-D02-1	
17	INVERTER CABLE FOR D610S	43-D610R-010	
18	RUBBER (25*2*0.5)	47-00120-255	
19	SPONGE (60*7*3T)	47-00191-600	
20	BACK COVER MODULE FOR D630S 14"	39-D6301-020	
21	LCD HINGE-L 14.1" FOR 4200	33-42001-031	
22	NAME PLATE "NOTEBOOK"	45-42001-010	

LCD 15" (D630S)

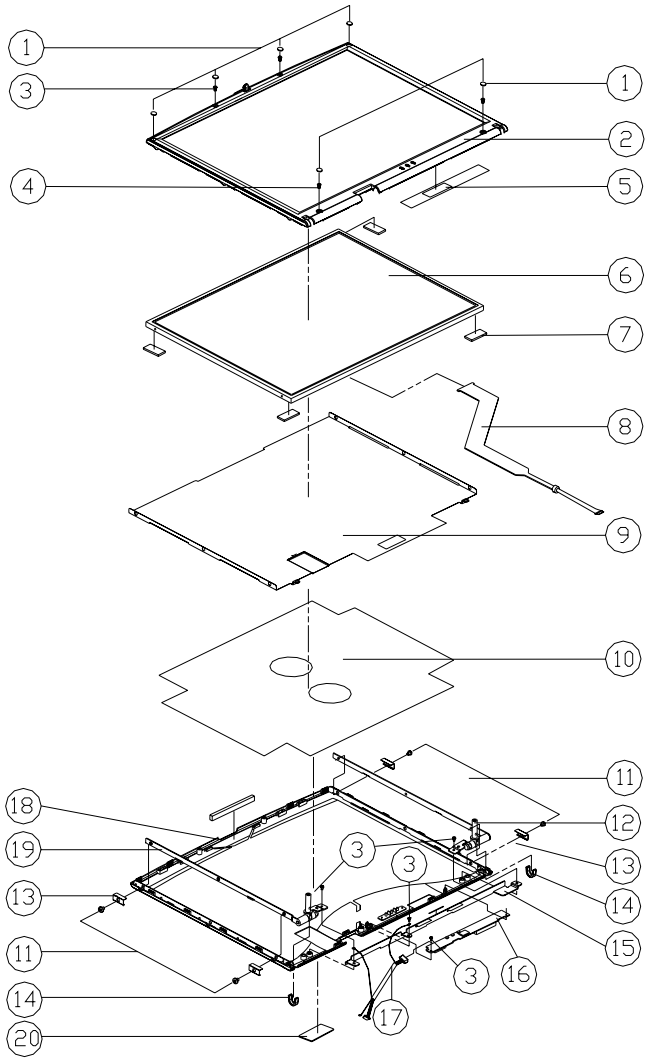

ITEM	PART NAME	PART NO	REMARK
1	LCD F-CVR RUBBER SILICONE	47-32001-020	
2	FRONT COVER MODULE FOR D630S 15"	39-D6301-110	LG
3	SCREW M2*4L KI BNI ICT NY	35-B9120-4RA	
4	SCREW M2.5*5L K1 BNI ICT NY	35-B9125-5R0	
5	鋁箔 FOR LCD FRONT COVER	40-42031-010	
6	LCD 15" LG TFT LP150X04 XGA 6.5mm	50-L2265-L00	LG
7	LCD PORON 16X16X2.0mm	47-42091-040	
8	LCD CABLE FOR 15" LG-LP150X04 D610S	43-D6101-040	LG
9	LCD BACK COVER 鋁箔FOR 4200 15"	40-42031-111	
10	MYLAR (295*220 BK) FOR 27C/S BACK COVER	40-00151-031	
11	SCREW M2*2L KI BZ ICT NY	35-B6120-2R0	
12	LCD HINGE LG 15" RIGHT	33-D6101-120	
13	LCD CLAMPING FOR 4200	33-42001-040	
14	HINGE COVER FOR D630S	42-D637Y-011	
15	LCD BRACKET FOR LG 15"	33-D6101-010	
16	INVERTER BOARD FOR D610S	77-4200R-D02-1	
17	INVERTER CABLE FOR D610S	43-D610R-010	
18	BACK COVER MODULE FOR D630S 15"	39-D6301-120	
19	LCD HINGE LG 15" LEFT	33-D6101-130	
20	NAME PLATE "NOTEBOOK"	45-42001-010	

Figure 15
LCD 15" (D630S)

Battery (D630S)

Figure 16
Battery (D630S)

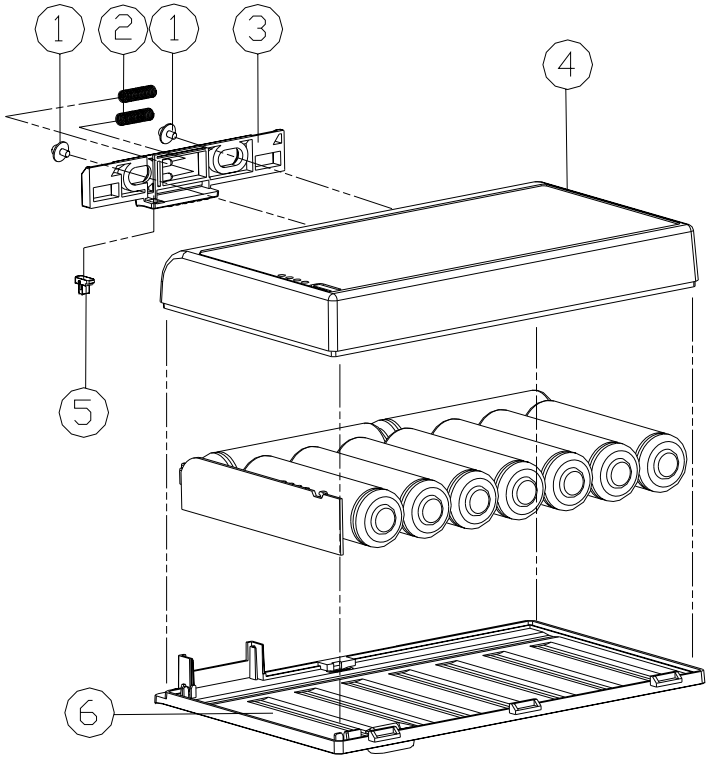

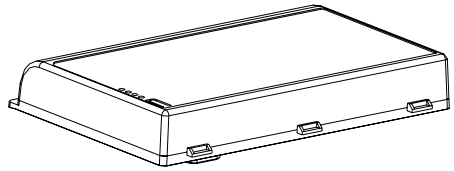

ITEM	PART NAME	PART NO	REMARK
1	SCREW M2*2.5L P NI ICT W/WASHER	35-01020-2RE	
2	SPRING FOR BATTERY	38-D610M-020	
3	HOOK FOR BATTERY FOR D610S	42-D61AM-011	
4	BATTERY TOP CASE FOR D630S	42-D637M-021	
5	HOOK LOCK KNOB FOR BATTERY FOR D630S	42-D638M-010	
6	BATTERY BOTTOM CASE FOR D630S	42-D637M-011	

Samsung CD-ROM Drive (D630S)

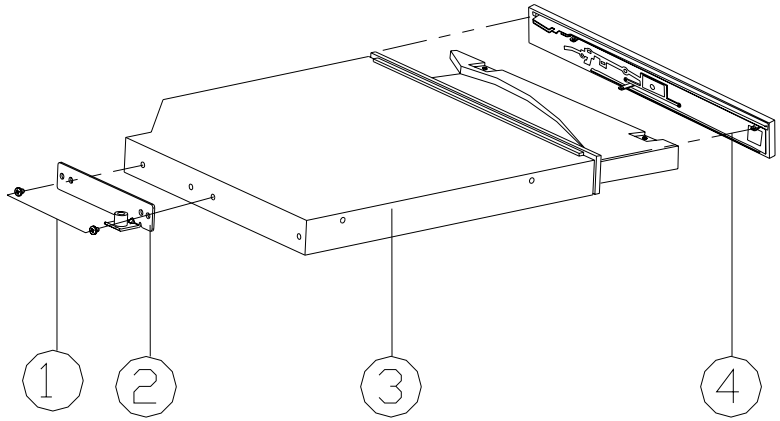

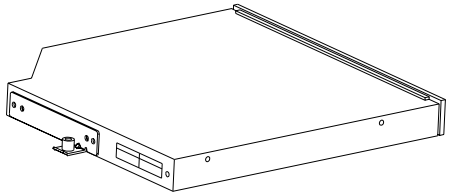

ITEM	PART NAME	PART NO	REMARK
1	SCREW M2*3L KI NI ICT NY	35-B1120-3RC	
2	CD-ROM BRACKET FOR D610S	33-D610Z-020	
3	CD-ROM 5 1/4" 24X SN-124 SAMSUNG	85-607□X-S00	
4	CD-ROM BEZEL MODULE FOR SAMSUNG	42-D637Z-100	

Figure 17
Samsung CD-ROM Drive (D630S)

TEAC CD-ROM Drive (D630S)

Figure 18
TEAC CD-ROM Drive (D630S)

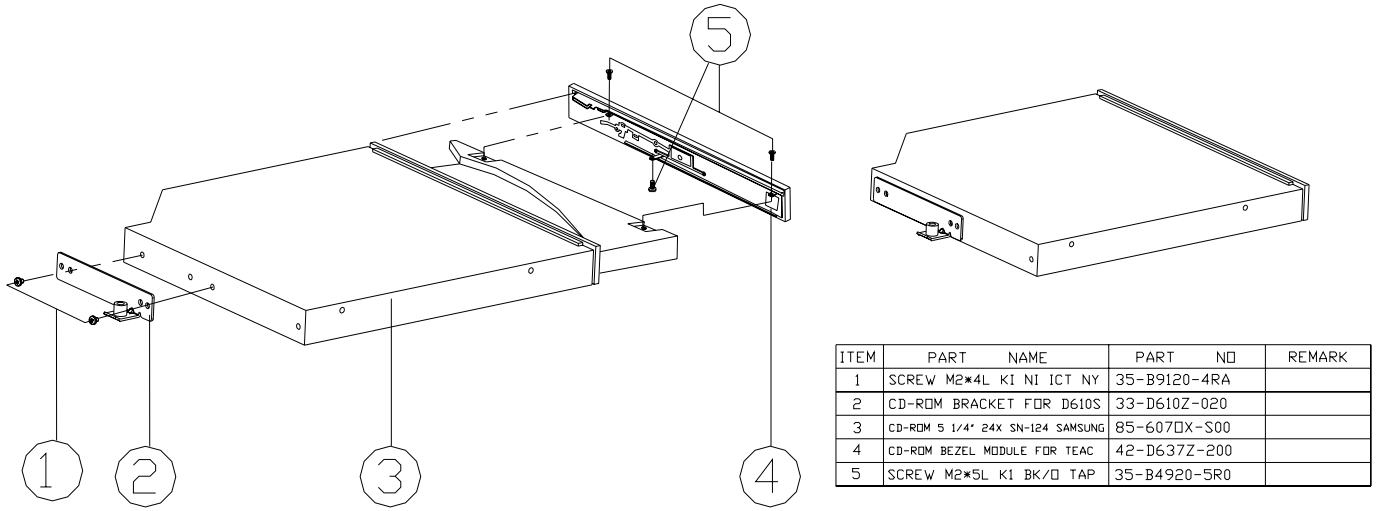

ITEM	PART NAME	PART NO	REMARK
1	SCREW M2*4L KI NI ICT NY	35-B9120-4RA	
2	CD-ROM BRACKET FOR D610S	33-D610Z-020	
3	CD-ROM 5 1/4" 24X SN-124 SAMSUNG	85-607□X-S00	
4	CD-ROM BEZEL MODULE FOR TEAC	42-D637Z-200	
5	SCREW M2*5L KI BK/□ TAP	35-B4920-5R0	

KME CD-RW Drive (D630S)

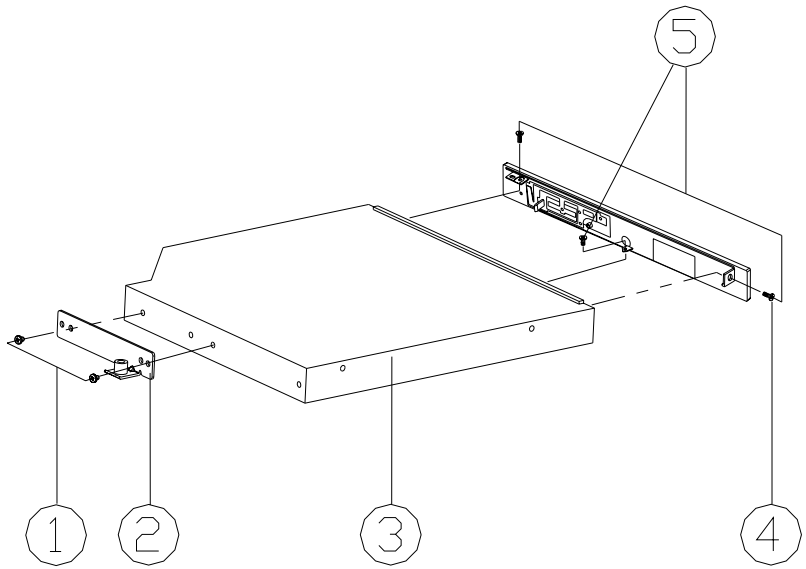

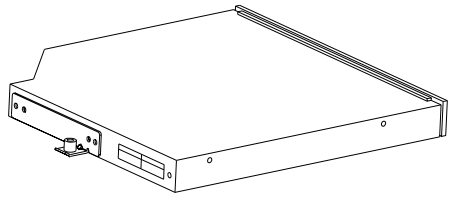

ITEM	PART NAME	PART NO	REMARK
1	SCREW M2*4L KI BNI ICT NY	35-B9120-4RA	
2	CD-ROM BRACKET FOR D610S	33-D610Z-020	
3	CD-RW 5 1/4" 8X UJDA-340 12.7mm KME	85-8078X-K01	
4	CD-RW BEZEL MODULE FOR KME UJDA340CL	42-D637W-100	
5	SCREW M1.7*2.5L K BZ AEFT	35-86517-2R5	

Figure 19
KME CD-RW Drive (D630S)

Combo Drive (D630S)

Figure 20
Combo Drive (D630S)

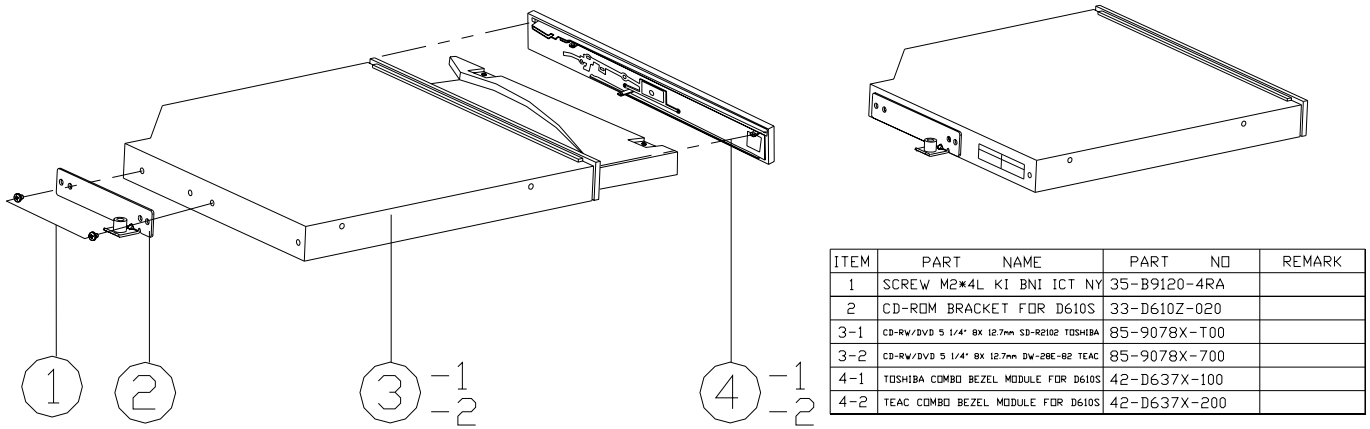

ITEM	PART NAME	PART NO	REMARK
1	SCREW M2*4L KI BNI ICT NY	35-B9120-4RA	
2	CD-ROM BRACKET FOR D610S	33-D610Z-020	
3-1	CD-RW/DVD 5 1/4" 8X 12.7mm SD-R2102 TOSHIBA	85-9078X-T00	
3-2	CD-RW/DVD 5 1/4" 8X 12.7mm DW-28E-B2 TEAC	85-9078X-700	
4-1	TOSHIBA COMBO BEZEL MODULE FOR D610S	42-D637X-100	
4-2	TEAC COMBO BEZEL MODULE FOR D610S	42-D637X-200	

Toshiba DVD-ROM Drive (D630S)

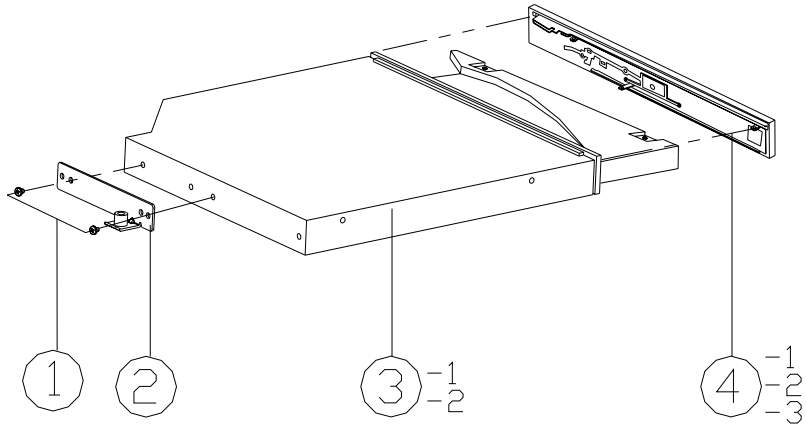

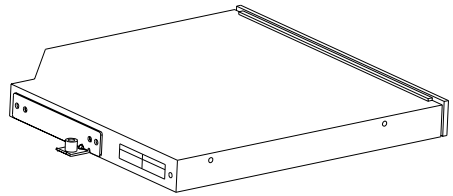

ITEM	PART NAME	PART NO	REMARK
1	SCREW M2*4L KI BNI ICT NY	35-B9120-4RA	
2	CD-ROM BRACKET FOR D610S	33-D610Z-020	
3-1	DVD 5 1/4" 8X 12.7mm SD-C2502 TOSHIBA	85-7078X-T02	
3-2	DVD 5 1/4" 8X 12.7mm DV-28E-B82 TEAC	85-7078X-700	
4-1	TOSHIBA DVD BEZEL MODULE FOR D630S	42-D637V-100	
4-2	TOSHIBA DVD BEZEL MODULE FOR D630S	42-D637V-200	
4-3	DVD BEZEL MODULE FOR TEAC	42-D637V-300	

Figure 21
Toshiba DVD-ROM Drive (D630S)

Hard Disk Drive (D630S)

Figure 22
Hard Disk Drive (D630S)

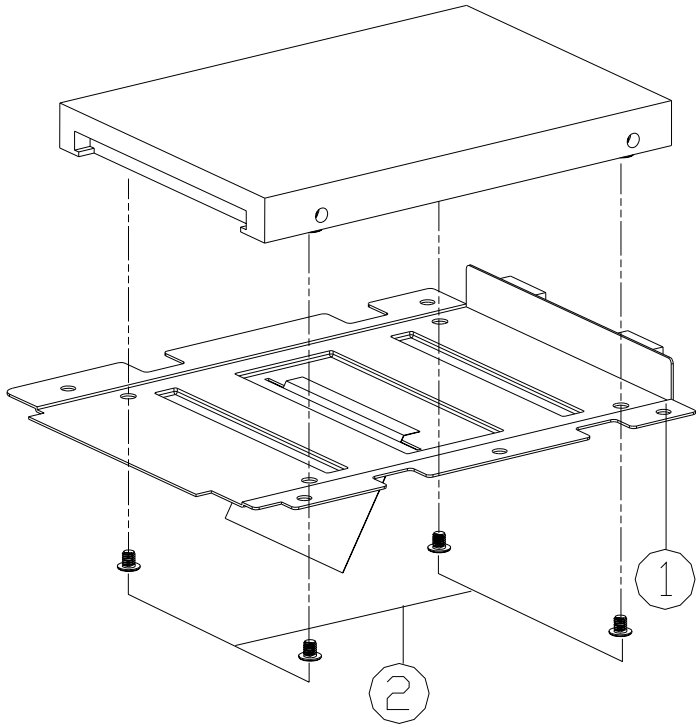

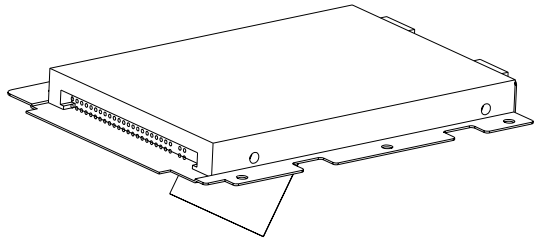

ITEM	PART NAME	PART NO	REMARK
1	HDD FRAME FOR D610S	33-D610I-010	
2	SCREW M3*4L K1 NI ICT NY	35-B1130-4R0	

Appendix B:Schematic Diagrams

This appendix has circuit diagrams of the systems PCB's:

Printed Circuit Board	Part No. of the Latest Version
System Board	71-D6100-D03
Inverter Board	71-D6100-D01

The following table indicates where to find the appropriate schematic diagram.

Table 1 - 1
Schematic Diagram

Diagram - Page	Diagram - Page
System Block Diagram - Page B - 3	961A-2 (Misc Signals) 2 of 4 - Page B - 19
Table - Page B - 4	961A-3 (USB) 3 of 4 - Page B - 20
Socket 478 1 of 2 - Page B - 5	961A-4 (Power & RTC) 4 of 4 - Page B - 21
Socket 478 2 of 2 - Page B - 6	IDE Connectors - Page B - 22
VCC Core Power - Page B - 7	PCI LAN RTL8139C - Page B - 23
+2.5V, +1.8VS, +1.25VS - Page B - 8	PCMCIA TI PCI1410 - Page B - 24
Clock Generator - Page B - 9	TI1394 (TSB43AB22) - Page B - 25
650-1 (Host/AGP) 1 of 4 - Page B - 10	LPC Super I/O & ROM - Page B - 26
650-2 (Memory for DDR) 2 of 4 - Page B - 11	LPC H8 - Page B - 27
650-3 (HyperZip/VGA/Misc) 3 of 4 - Page B - 12	Fan / Audio & Modem Conn - Page B - 28
650-4 (Power) 4 of 4 - Page B - 13	Power Board / Power Button - Page B - 29
DDR SDRAM DIMM1 & DIMM2 - Page B - 14	+3V, +5V, +12V - Page B - 30
SSTL-2 Termination Resistors - Page B - 15	Charger - PWM - Page B - 31
LVDS Interface - Page B - 16	3VH8, +1.8V - Page B - 32
TV Encoder and S-Video Port - Page B - 17	Inverter Board - Page B - 33
961A-1 (PCI/IDE/HperZip) 1 of 4 - Page B - 18	

System Block Diagram

Sheet 1 of 30
System Block Diagram

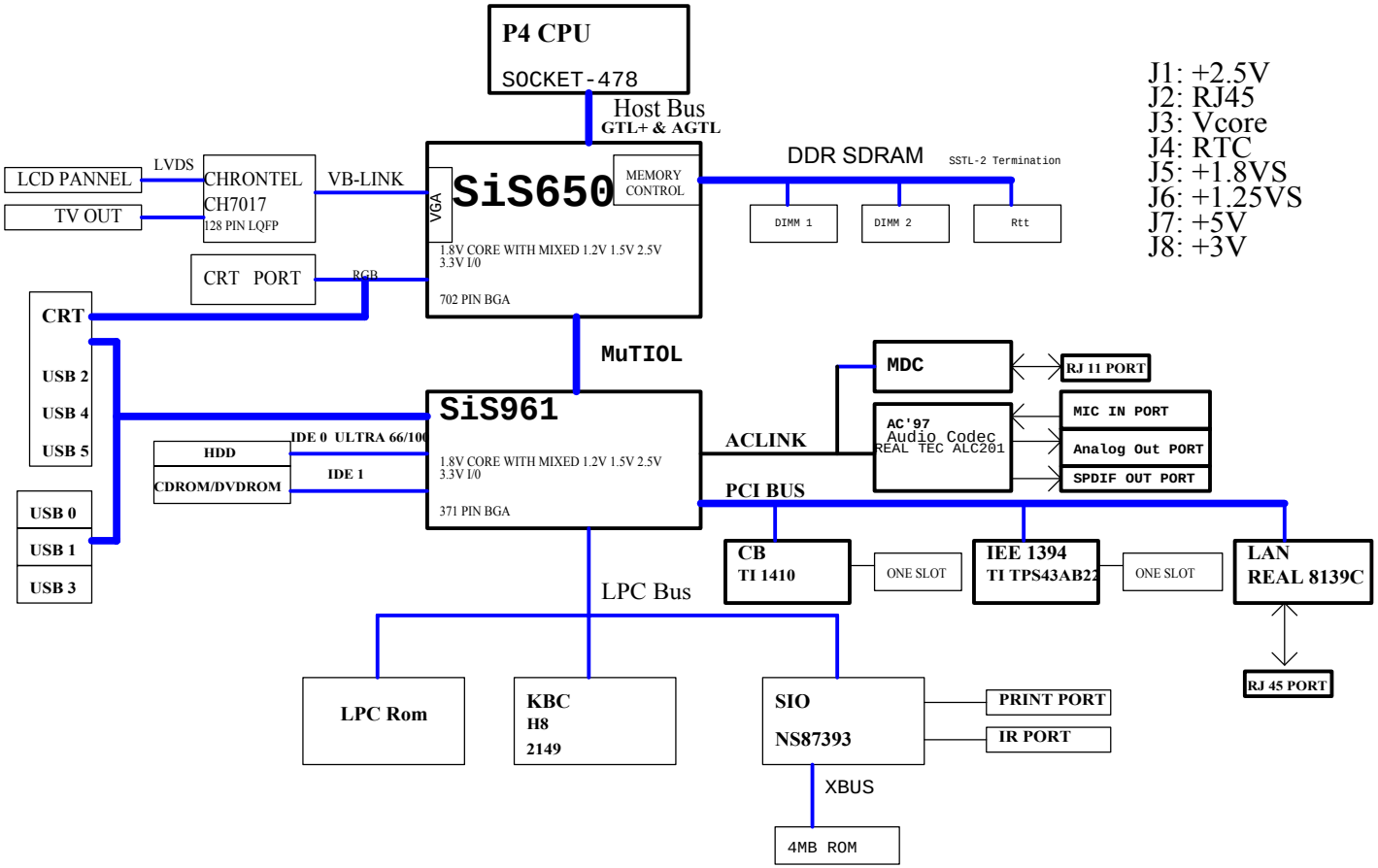

Table

Sheet 2 of 30
Table

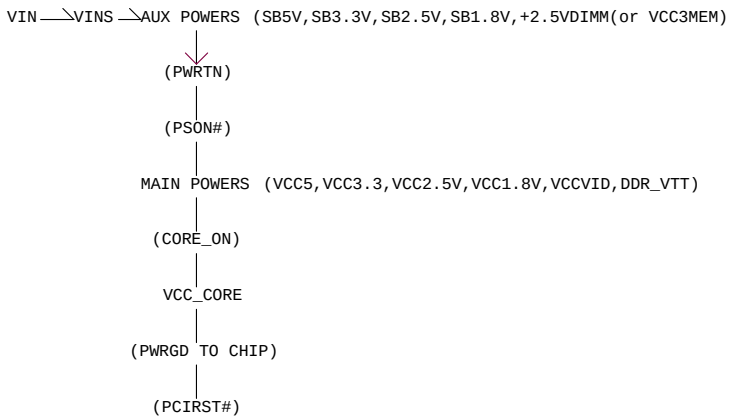

DEVICE			
SIS650(VGA)	INTA#		
CHRONTEL CH0717	INTA#		
1394 TI TBA43AB22	INTB#	REG1 GNT1	AD22
CB TI 1410A	*INTB# INTC#	REG0 GNT0	AD23
LAN REL8139C	INTD#	REG2 GNT2	AD21
MINI PCI	INTC# INTD#	REG3 GNT3	AD24 AD25

CPU Socket 478 - 1 of 2

Sheet 3 of 30
Socket 478
1 of 2

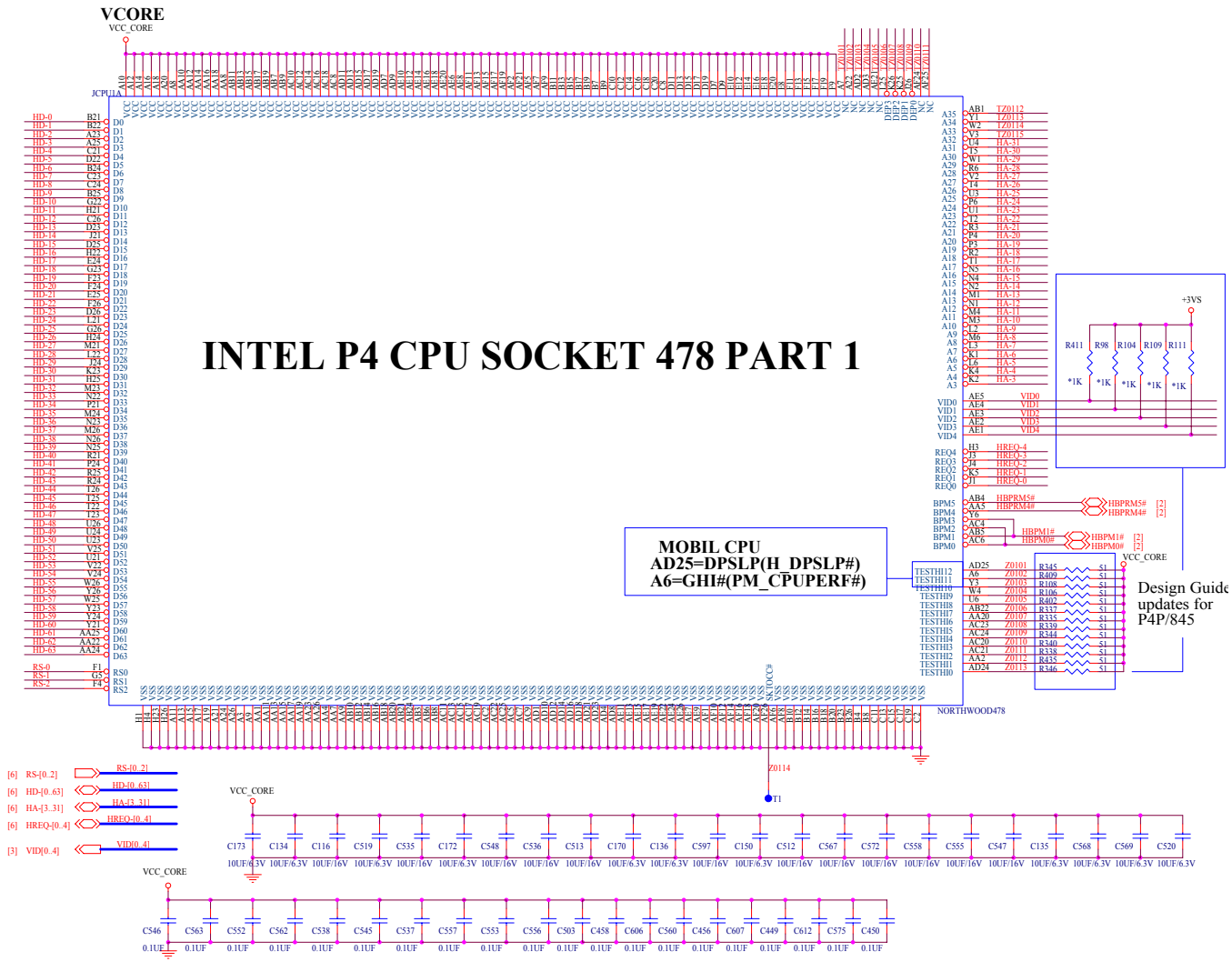

CPU Socket 478 - 2 of 2

Sheet 4 of 30
Socket 478
2 of 2

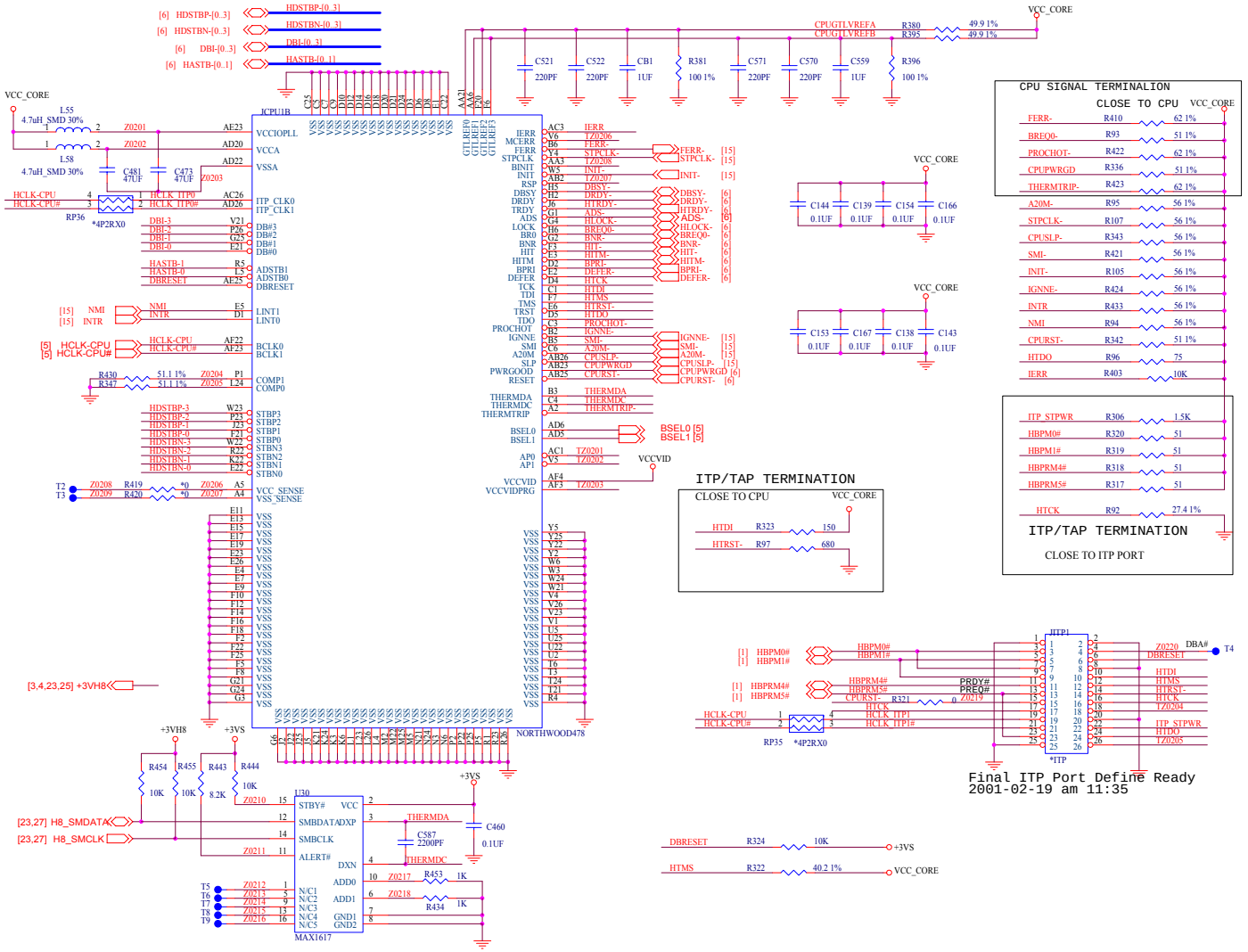

VCC Core Power

Sheet 5 of 30
VCC Core Power

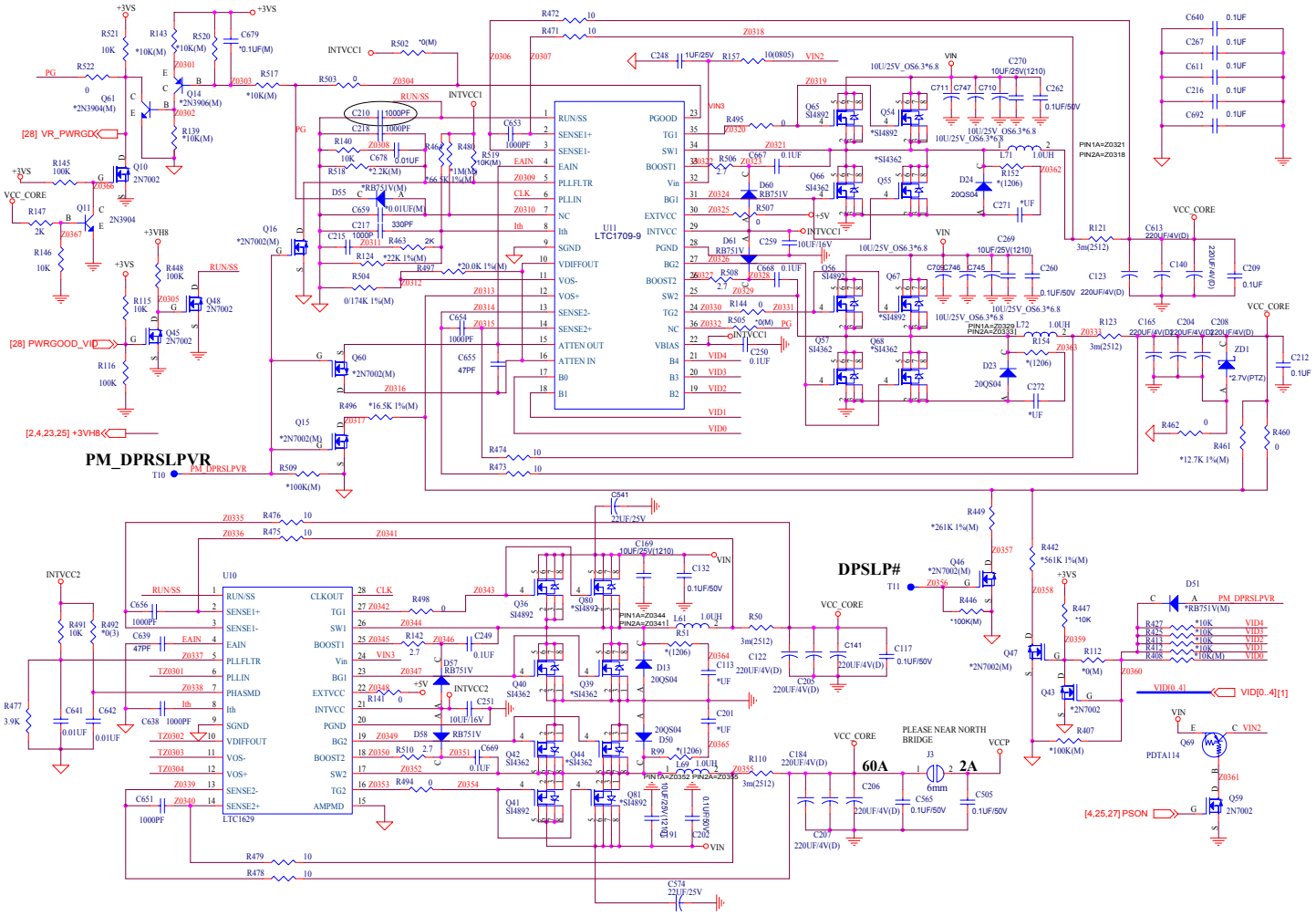

+2.5V, +1.8VS, +1.25VS

Sheet 6 of 30
+2.5V, +1.8VS, +1.25VS

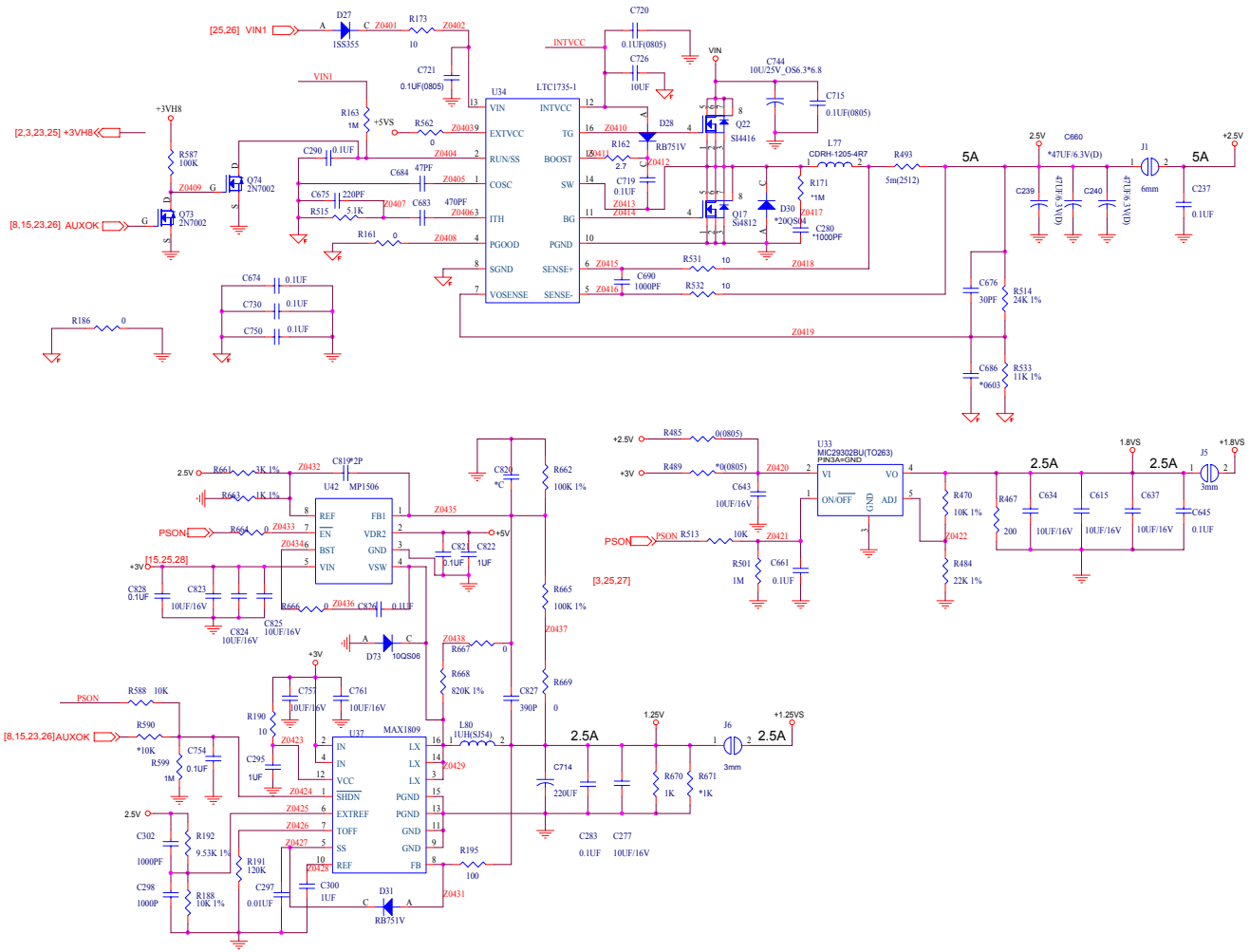

Main Clock Generator

Sheet 7 of 30
Clock Generator

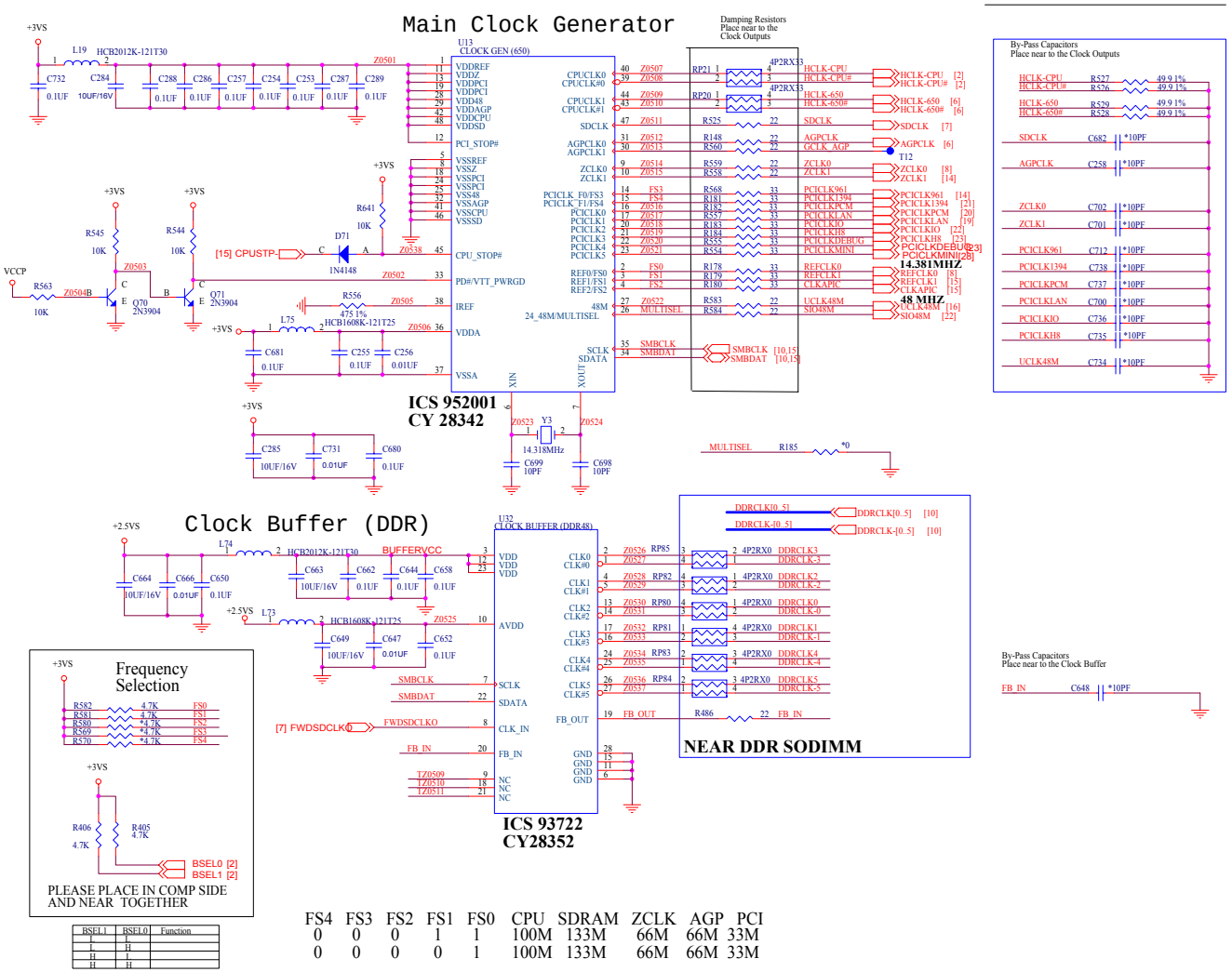

FS4	FS3	FS2	FS1	FS0	CPU	SDRAM	ZCLK	AGP	PCI
0	0	0	1	1	100M	133M	66M	66M	33M
0	0	0	0	1	100M	133M	66M	66M	33M

BSEL1	BSEL0	Function
L	L	
L	H	
H	L	
H	H	

650-1 (Host/AGP) - 1 of 4

Sheet 8 of 30
650-1 (Host/AGP)
1 of 4

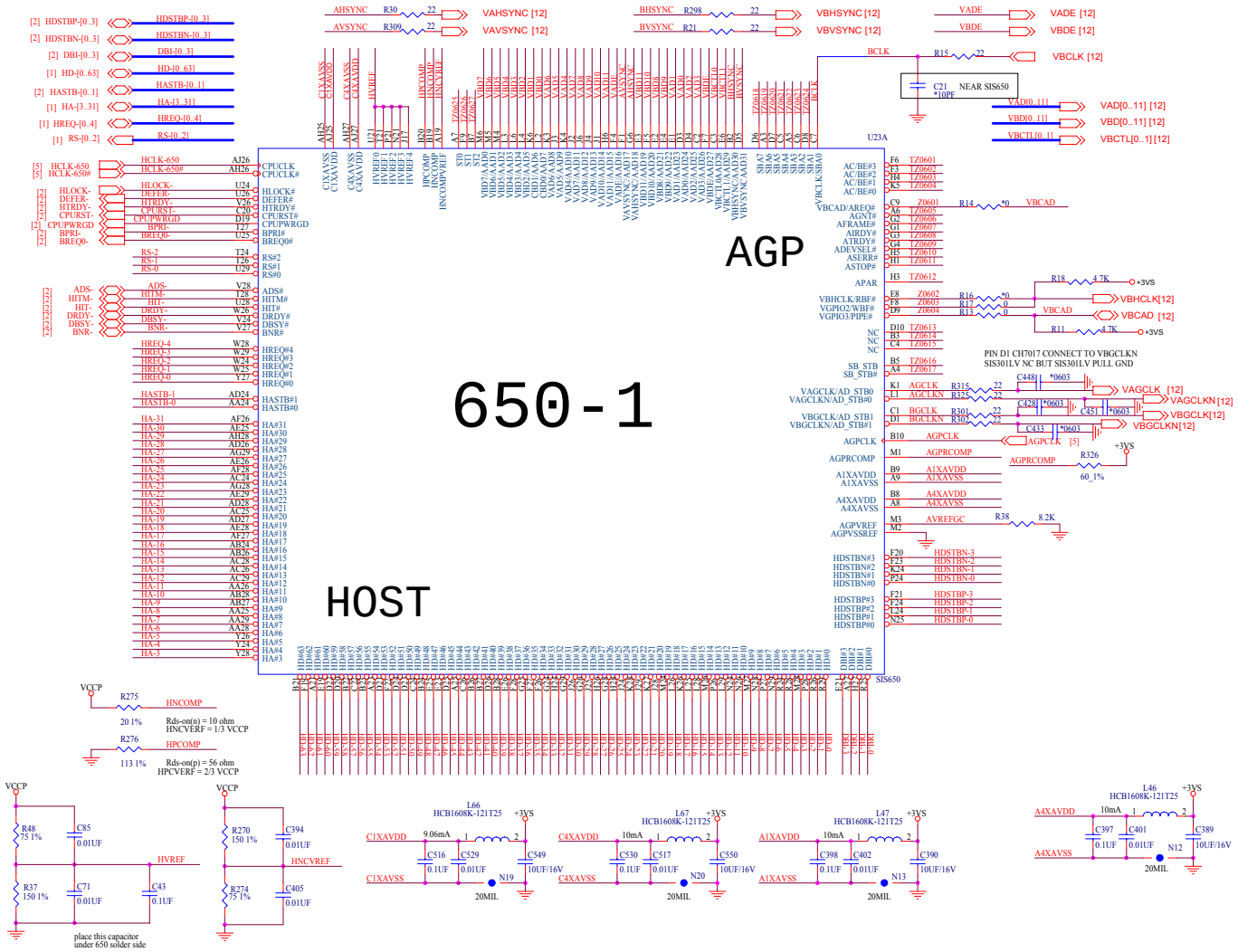

650-2 (Memory for DDR) - 2 of 4

Sheet 9 of 30
650-2
(Memory for DDR)
2 of 4

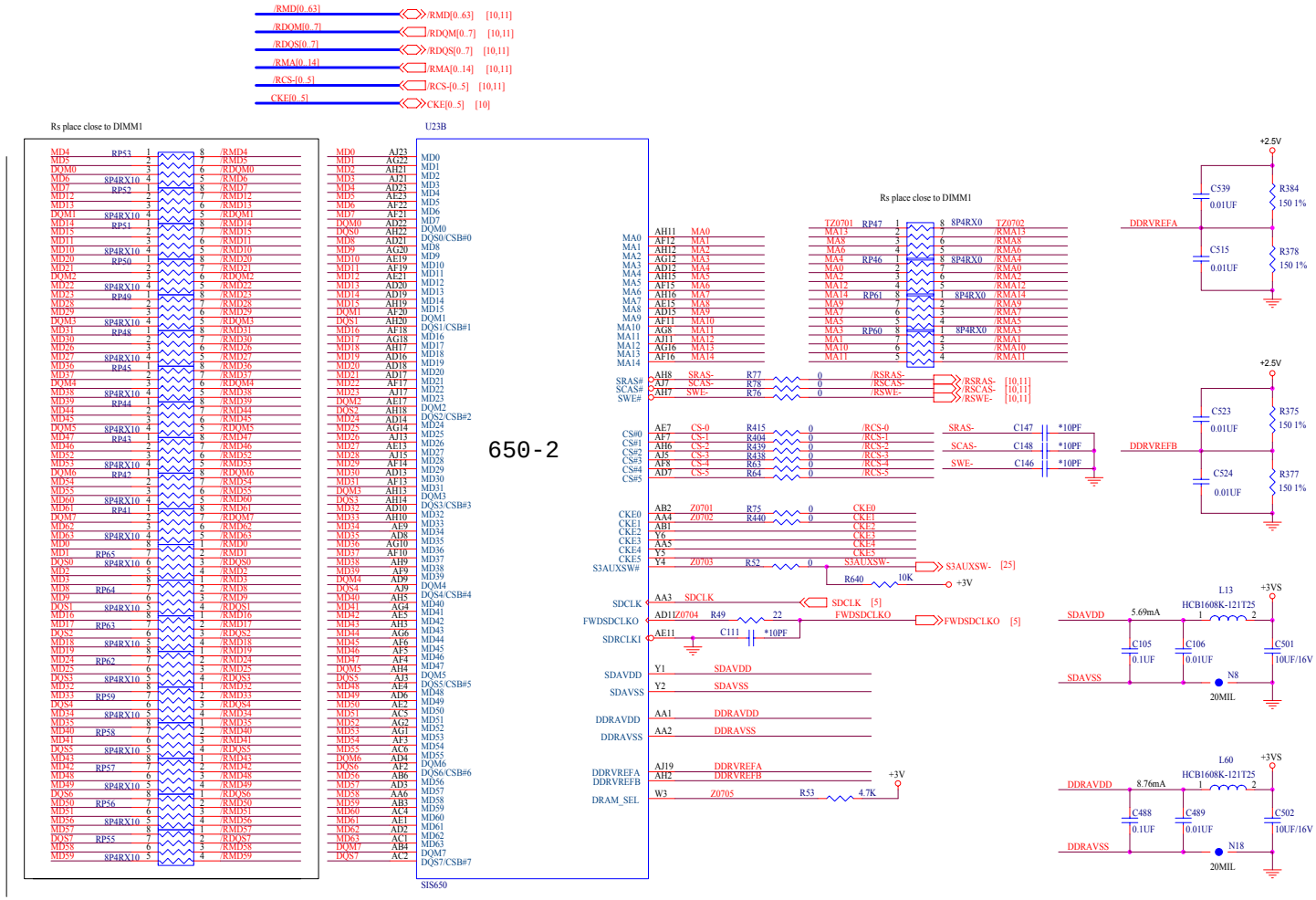

650-3 (HyperZip/VGA/Misc) - 3 of 4

Sheet 10 of 30
650-3
(HyperZip/VGA/Misc)
3 of 4

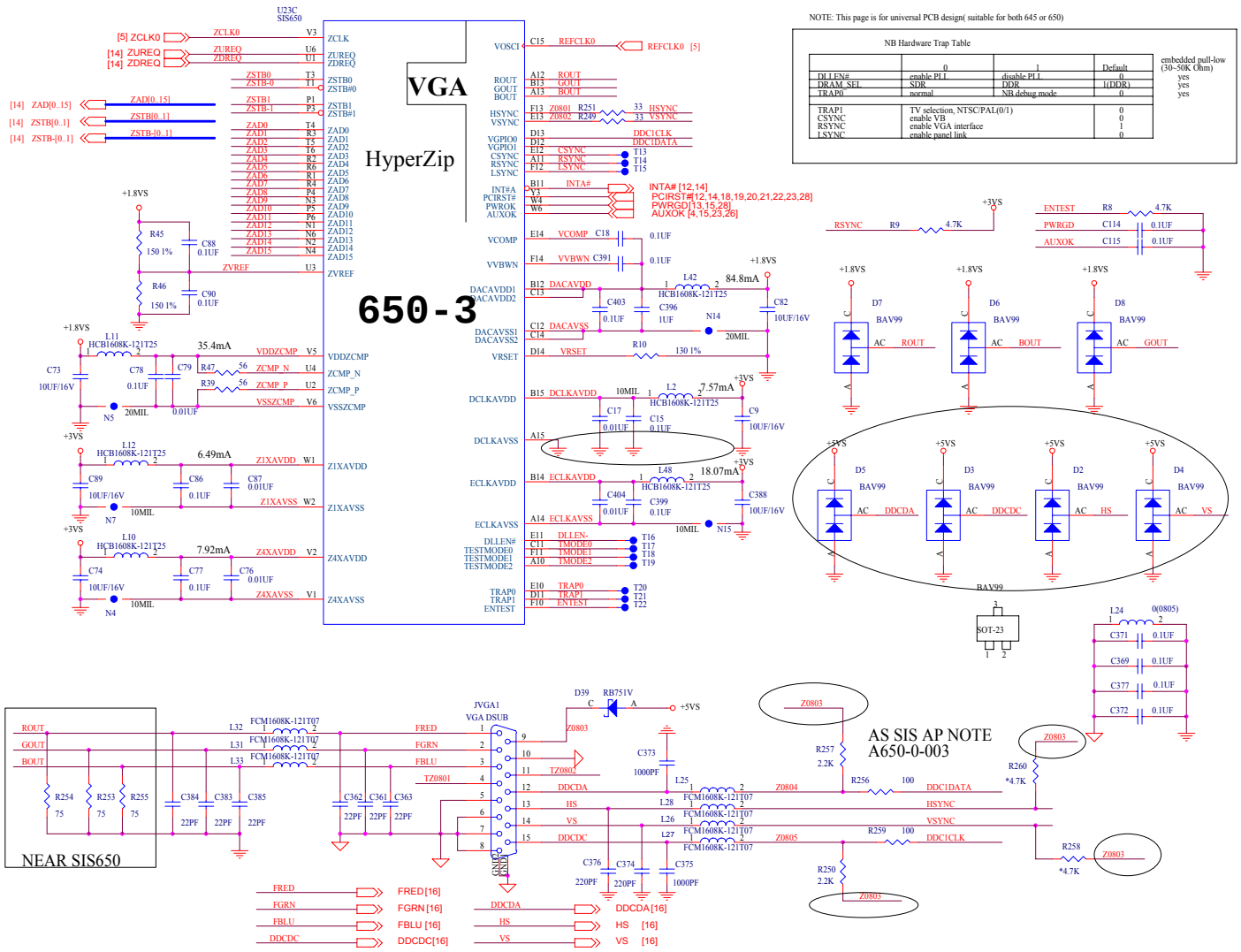

650-4 (Power) - 4 of 4

Sheet 11 of 30
650-4
(Power)
4 of 4

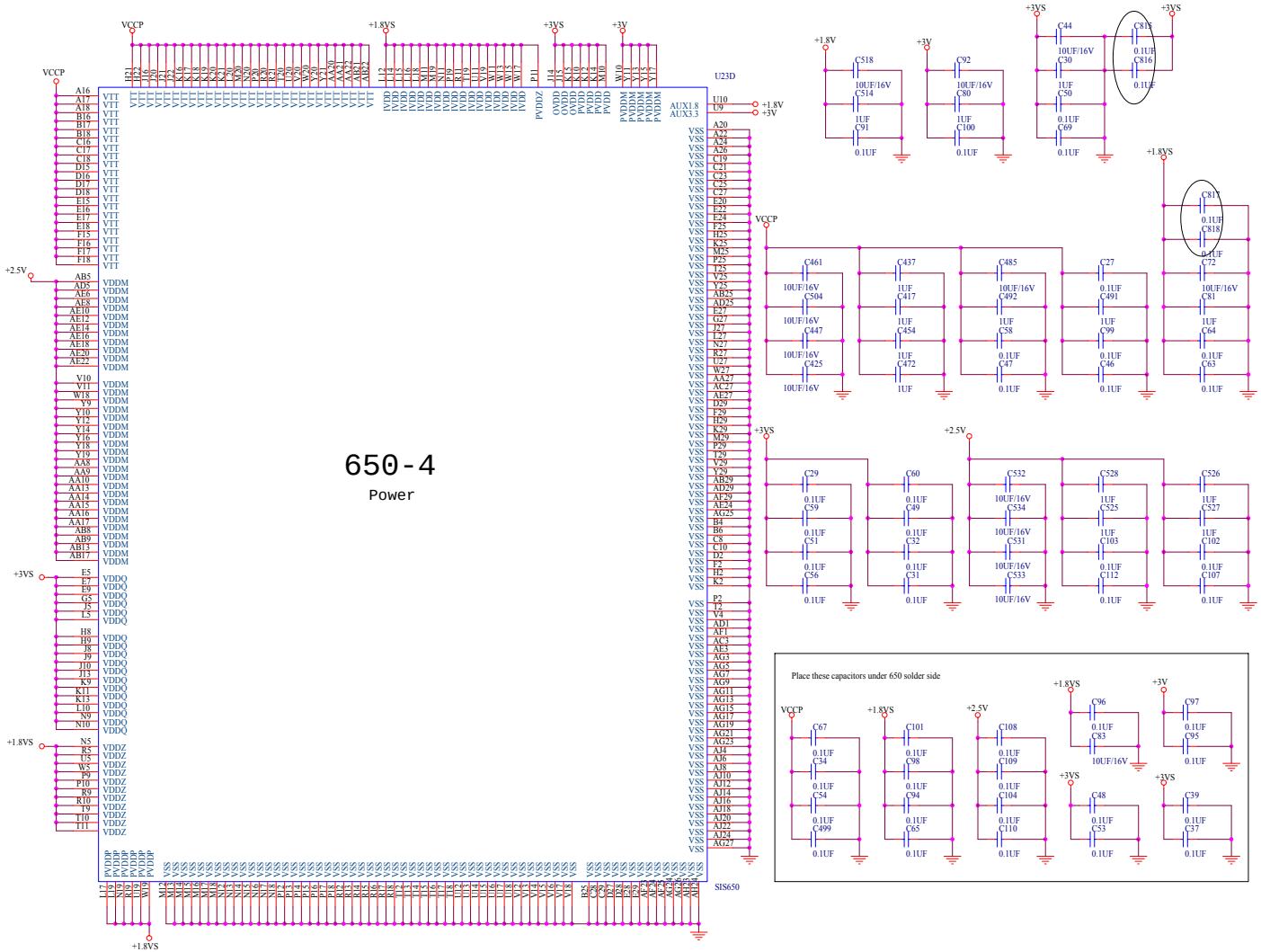

DDR SDRAM DIMM1 & DIMM2

Sheet 12 of 30
DDR SDRAM
DIMM1 & DIMM2

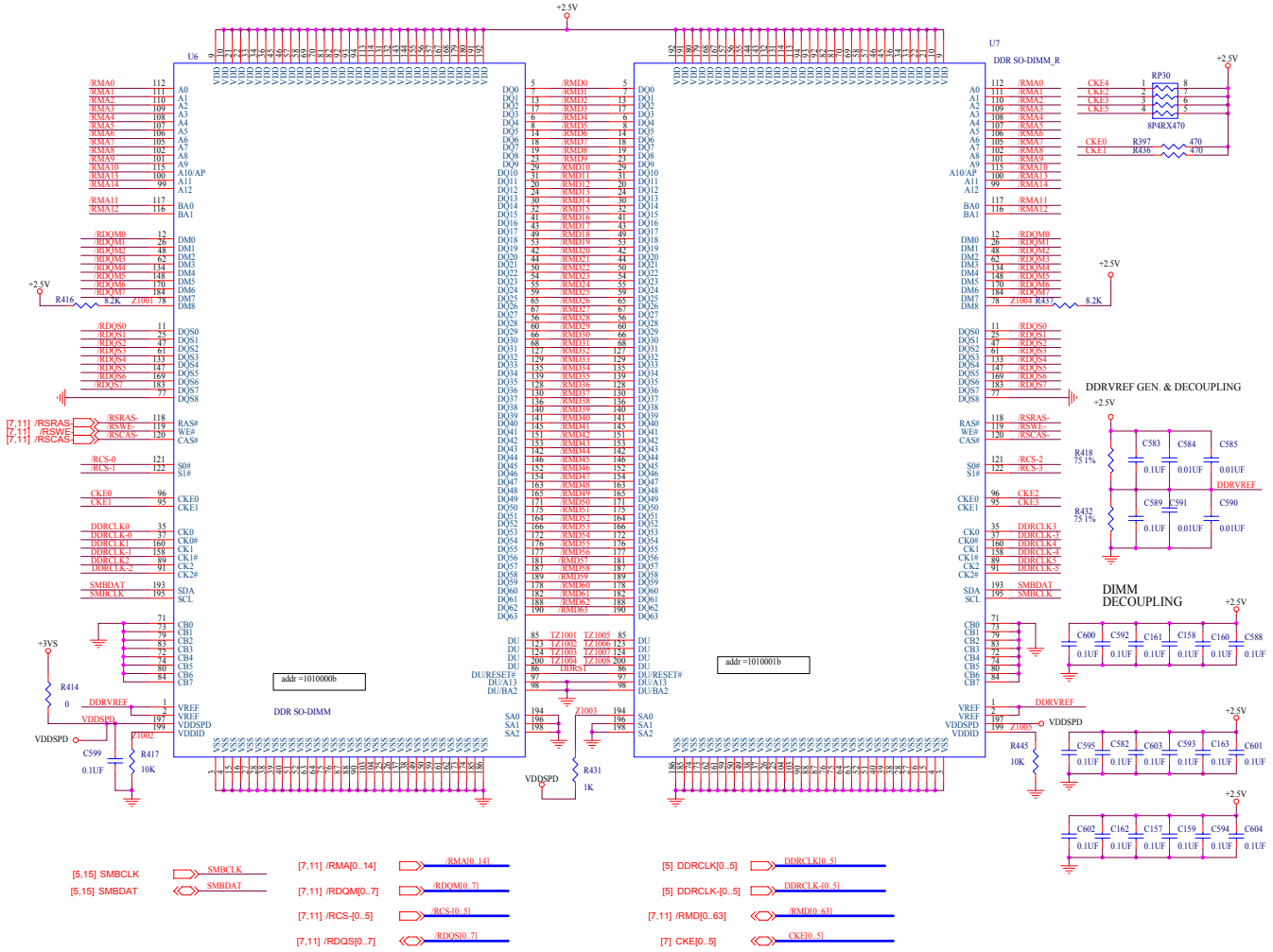

SSTL-2 Termination Resistors

Sheet 13 of 30
SSTL-2 Termination Resistors

SSTL-2 Termination Resistors

	DDR	Rs	Rtt
MD/DQM(/DQS)	SSTL-2	10	33
MA/Control	SSTL-2	0	33
CS	SSTL-2	0	47
CKE	OD 2.5V		

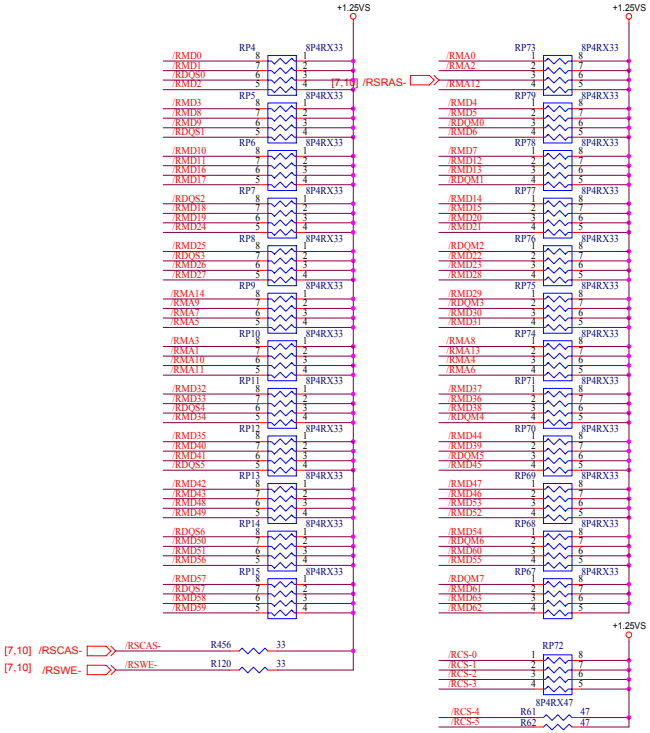

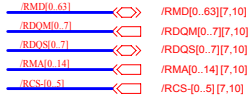

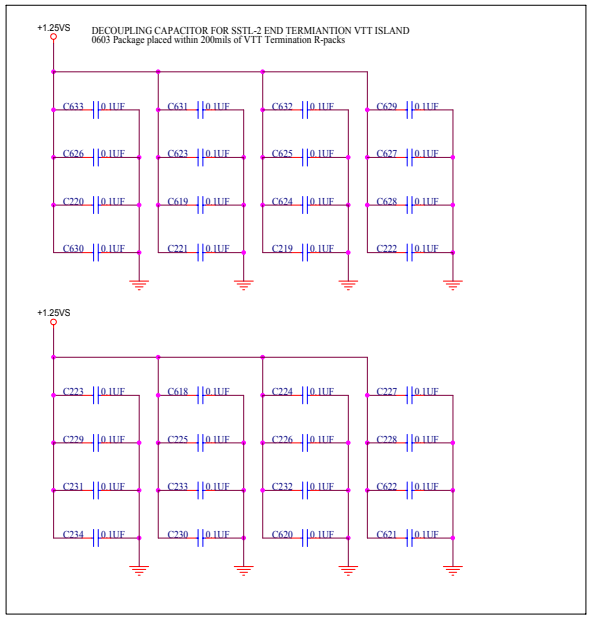

Chrontel CH7017 LVDS Interface

Sheet 14 of 30
LVDS Interface

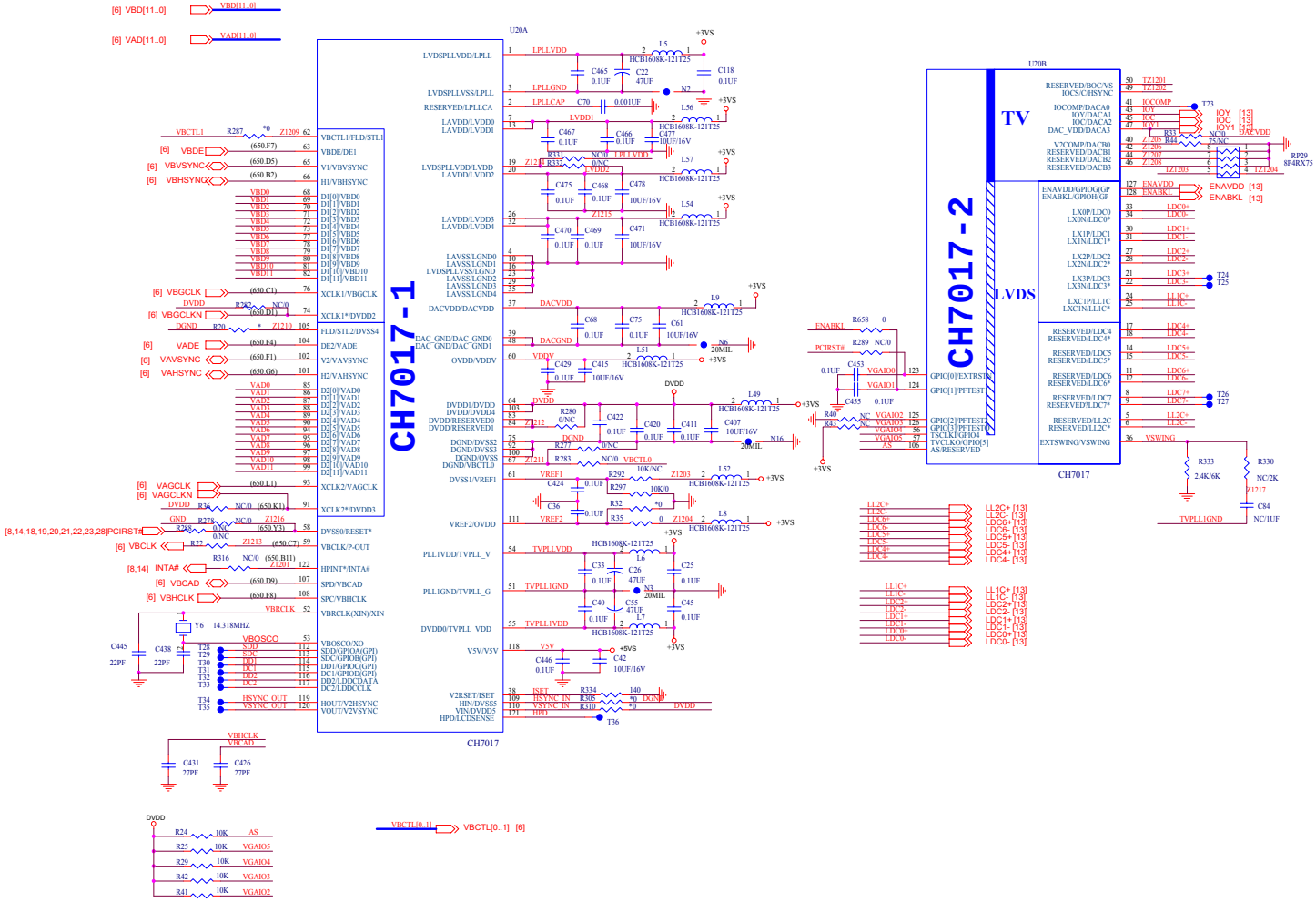

Chrontel CH7017 TV Encoder and S-Video Port

Sheet 15 of 30
TV Encoder and
S-Video Port

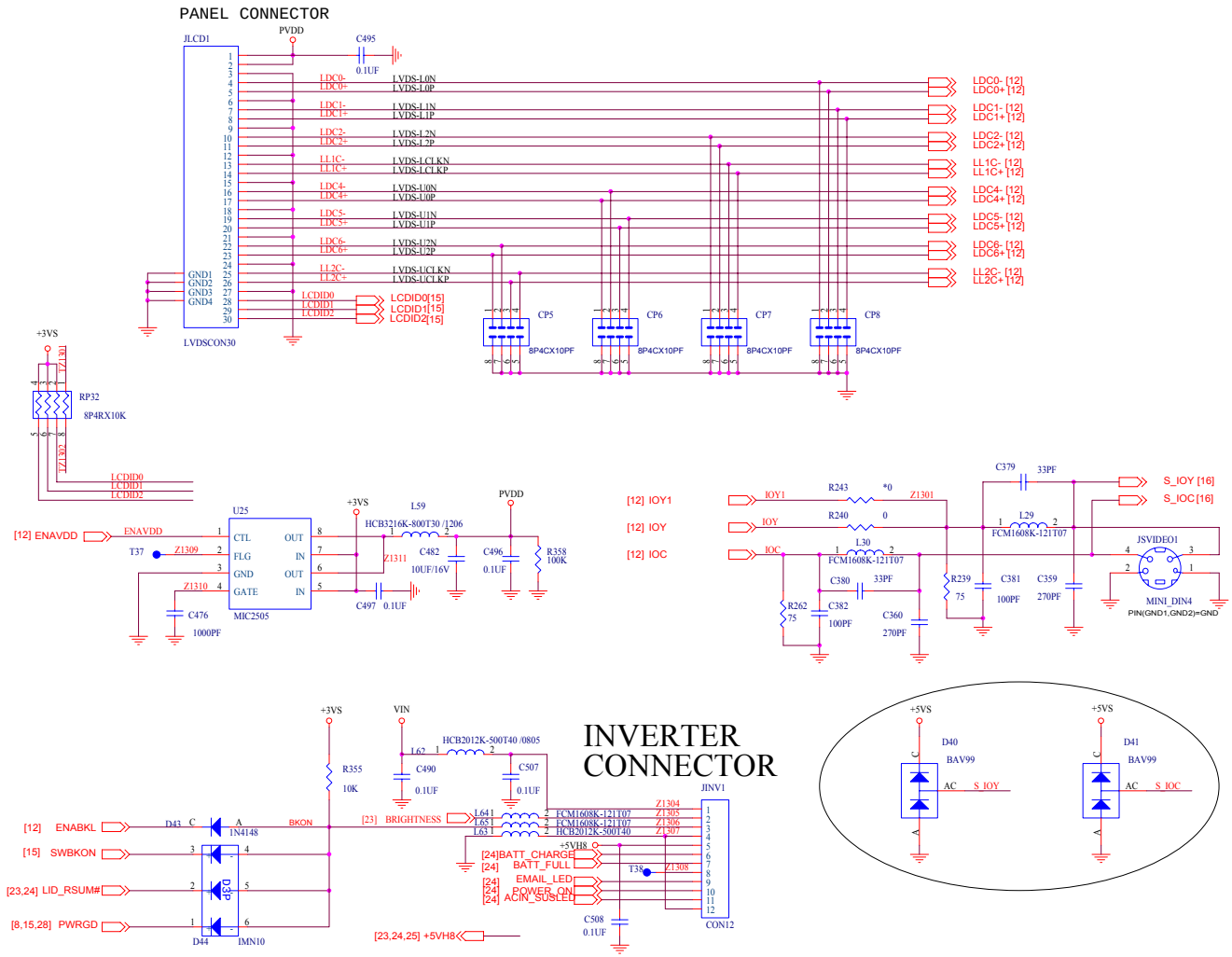

961A-1 (PCI/IDE/HyperZip) - 1 of 4

Sheet 16 of 30
961A-1
(PCI/IDE/HperZip)
1 of 4

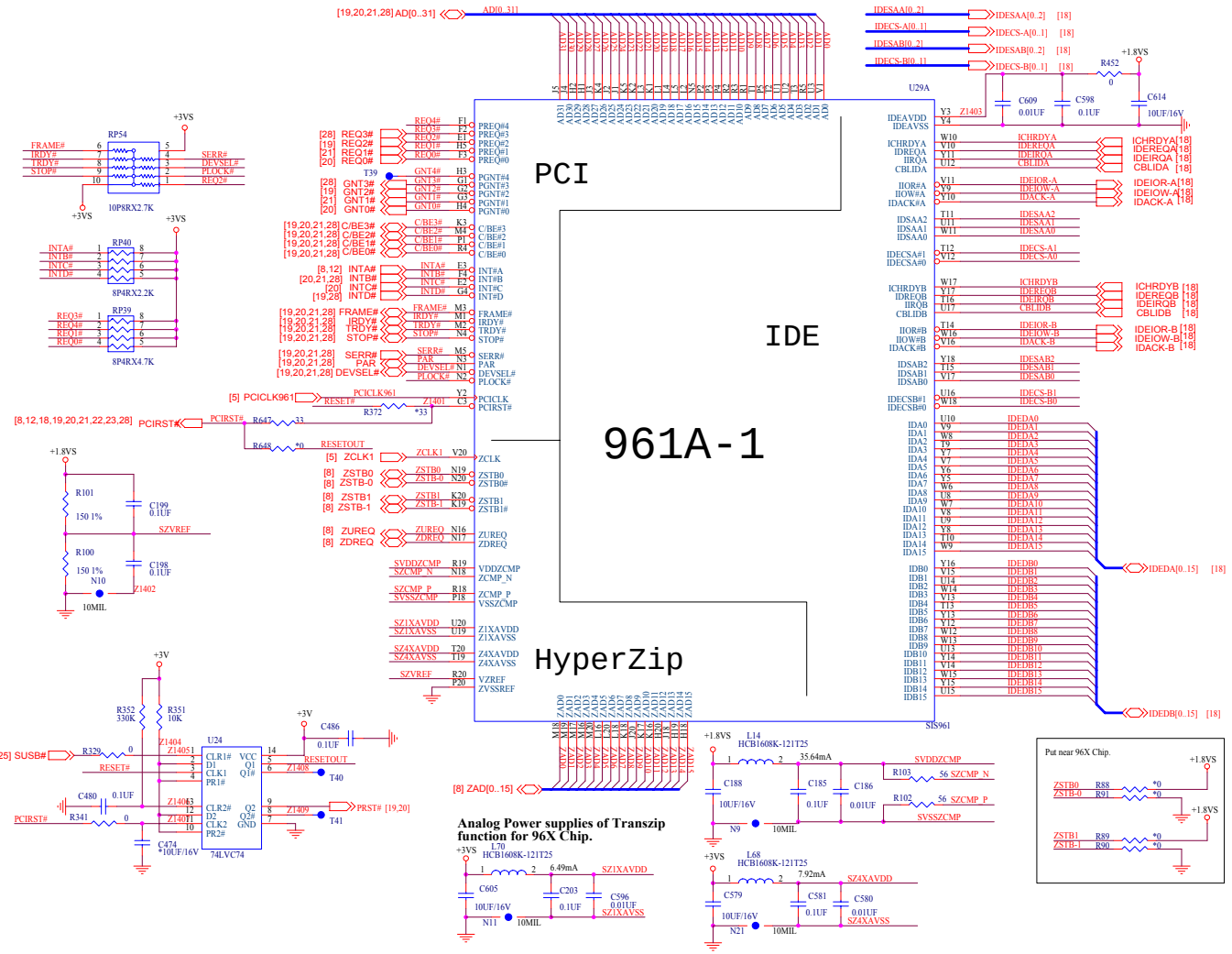

961A-2 (Misc Signals) - 2 of 4

Sheet 17 of 30
961A-2
(Misc Signals)
2 of 4

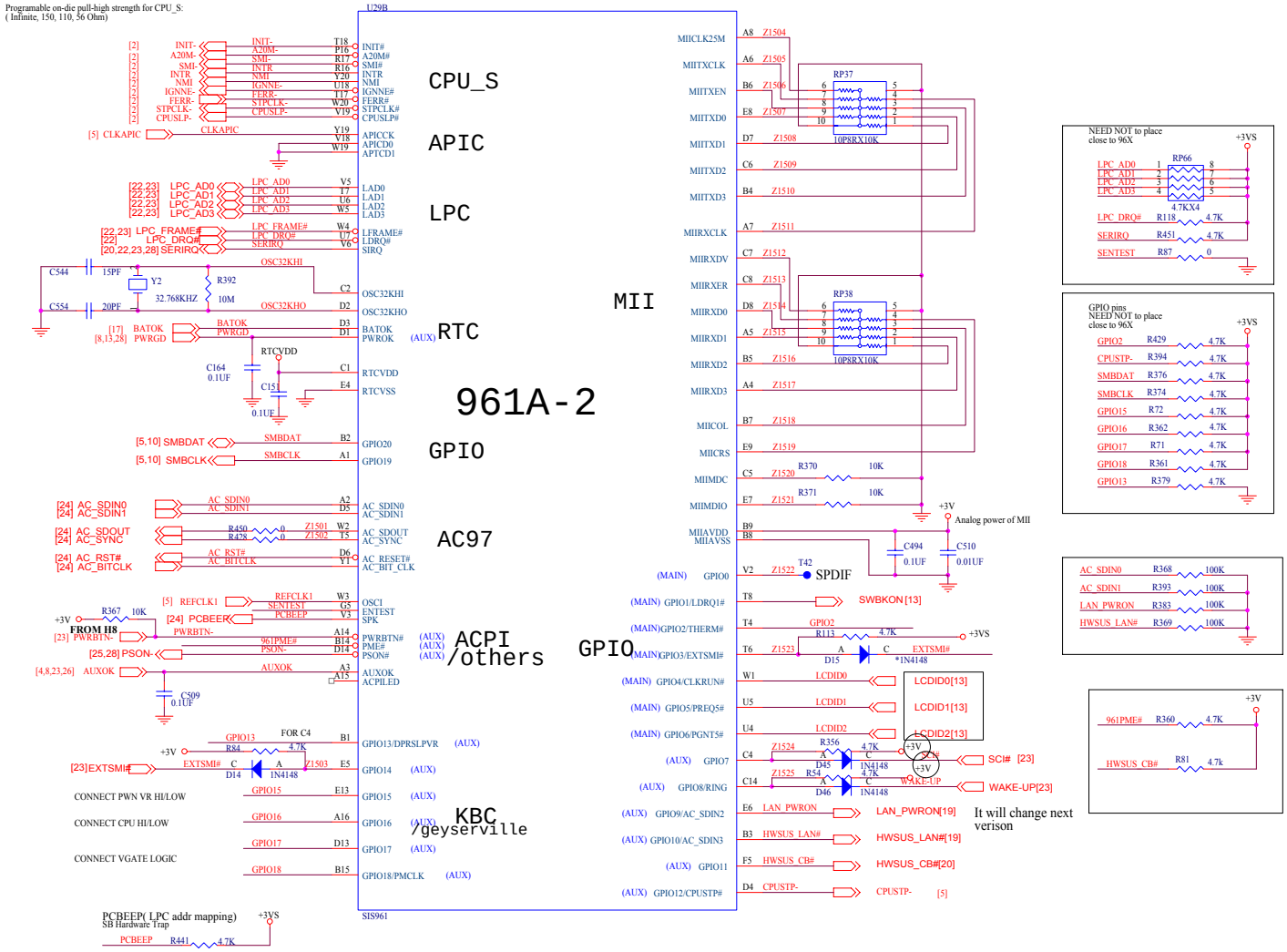

961A-3 (USB) - 3 of 4

Sheet 18 of 30
961A-3
(USB)
3 of 4

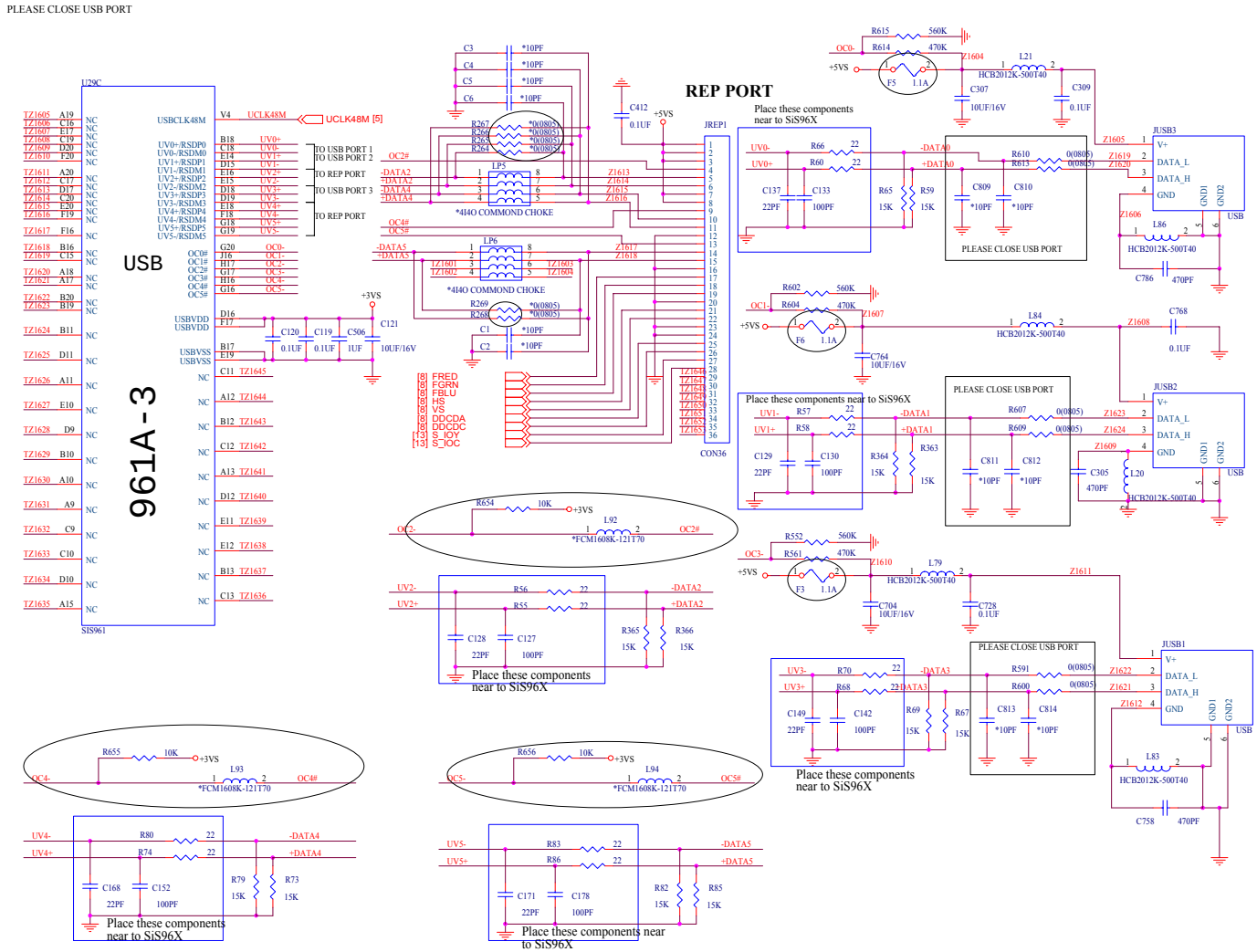

961A-4 (Power & RTC) - 4 of 4

Sheet 19 of 30
961A-4
(Power & RTC)
4 of 4

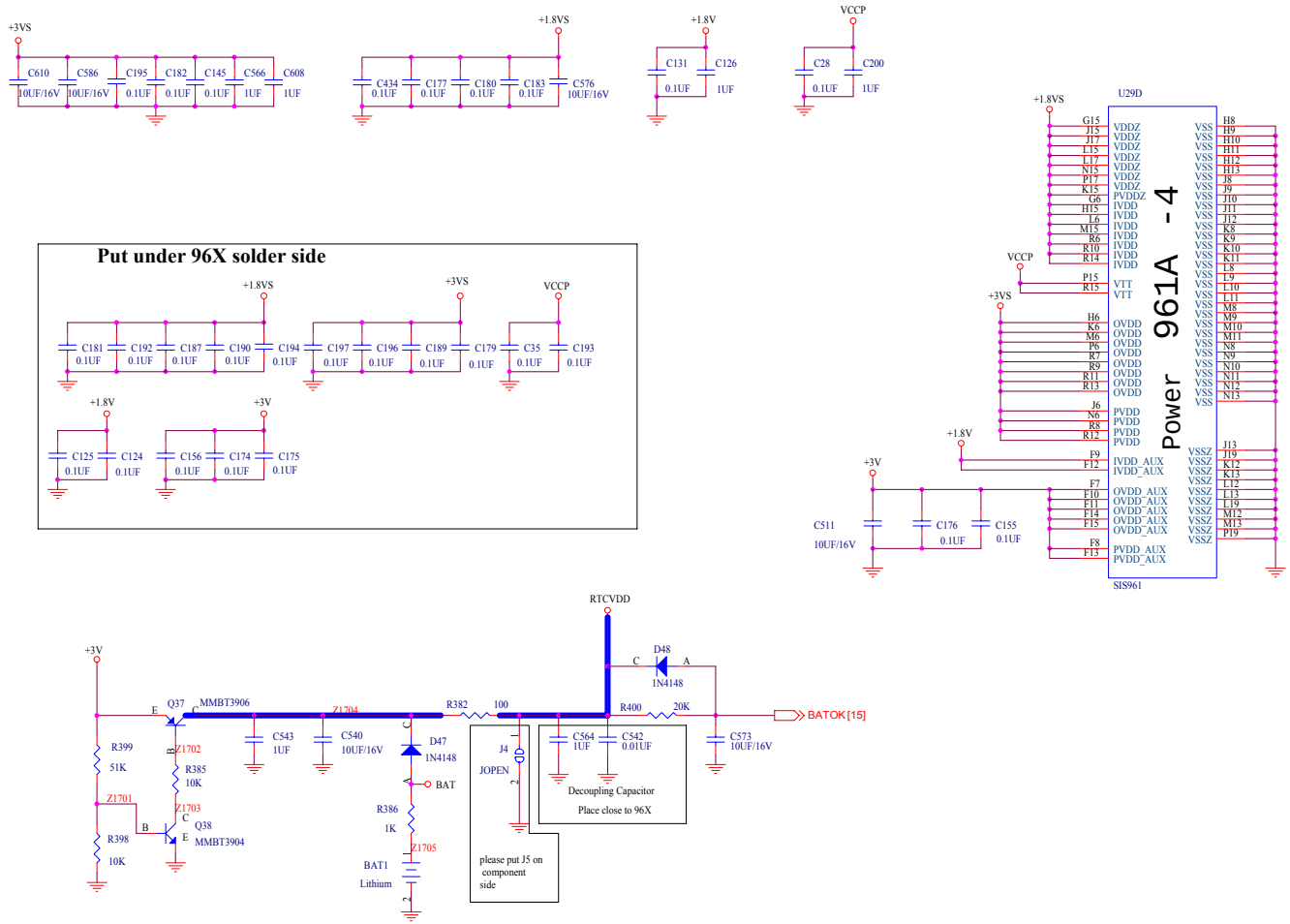

IDE Connectors

Sheet 20 of 30
IDE Connectors

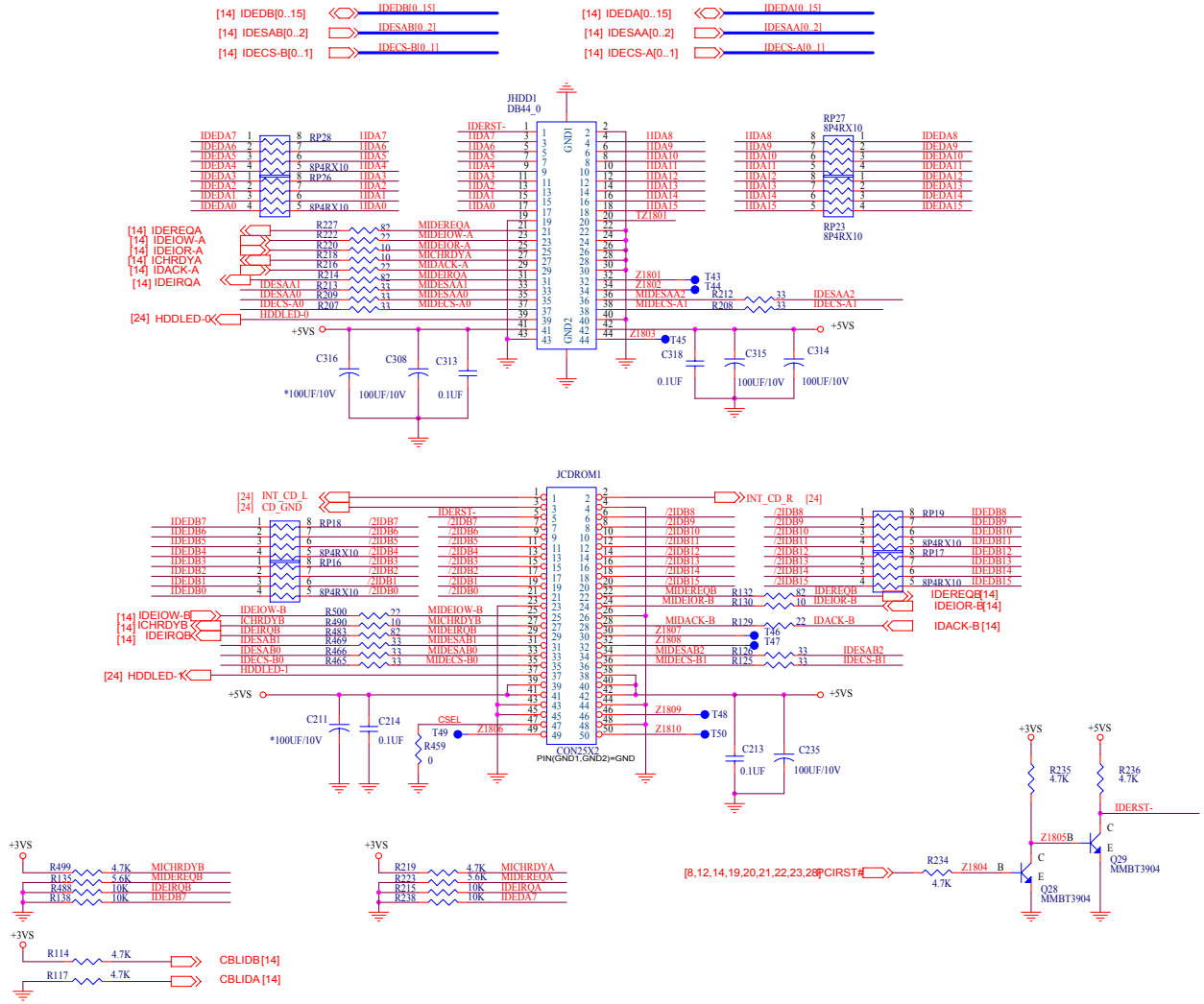

PCI LAN RTL8139C

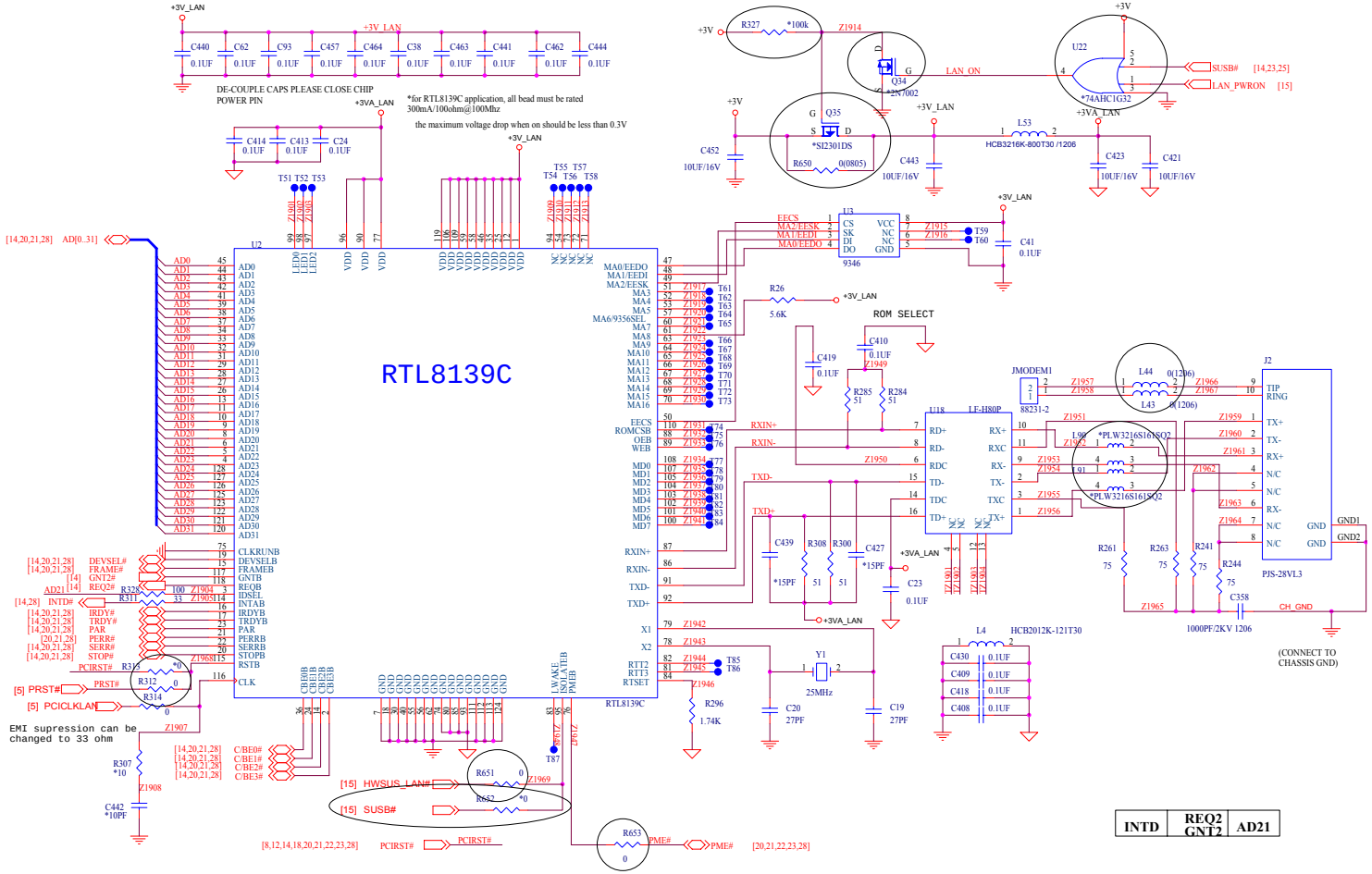

PCMCIA TI PCI1410

Sheet 22 of 30
PCMCIA TI PCI1410

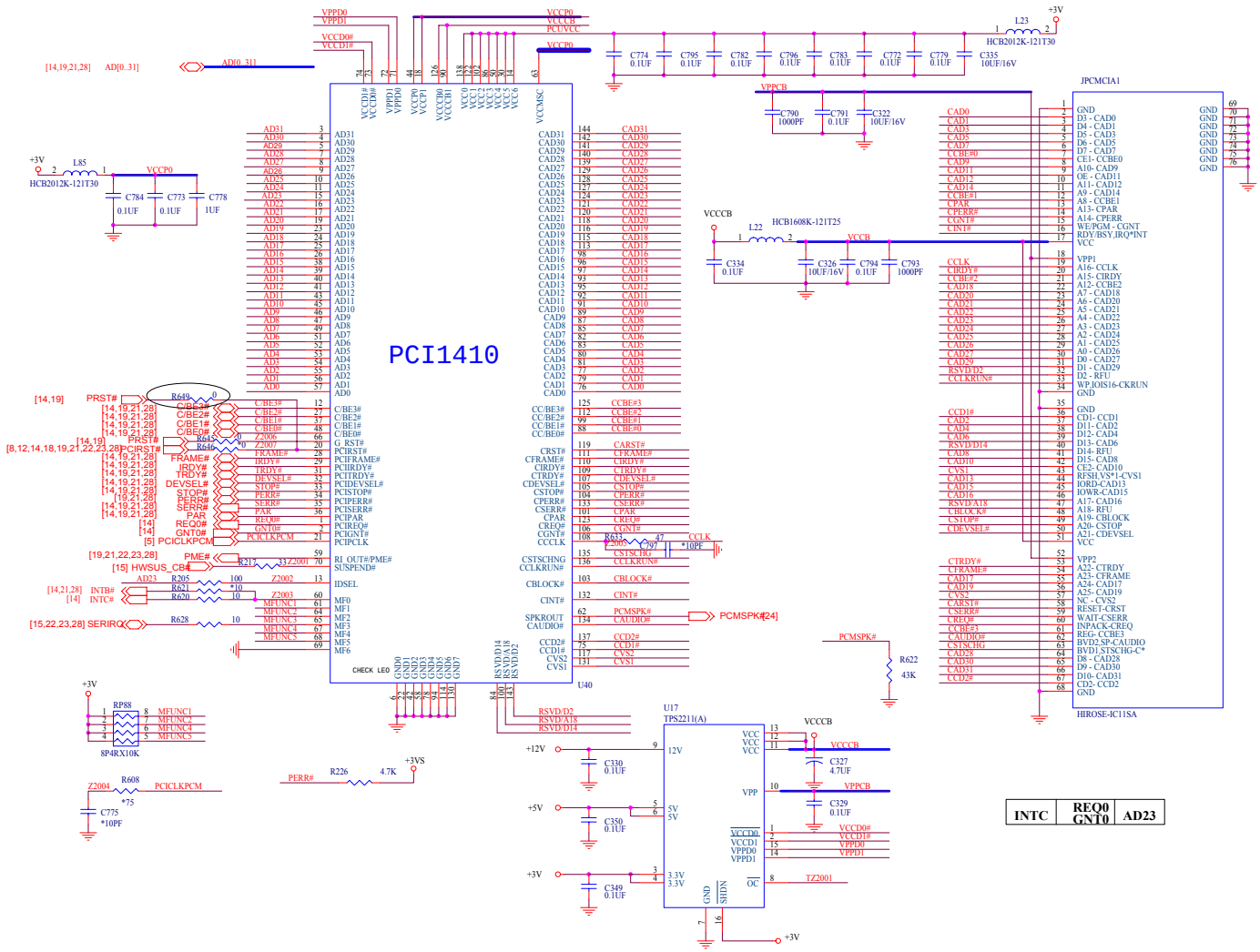

TI1394 (TSB43AB22)

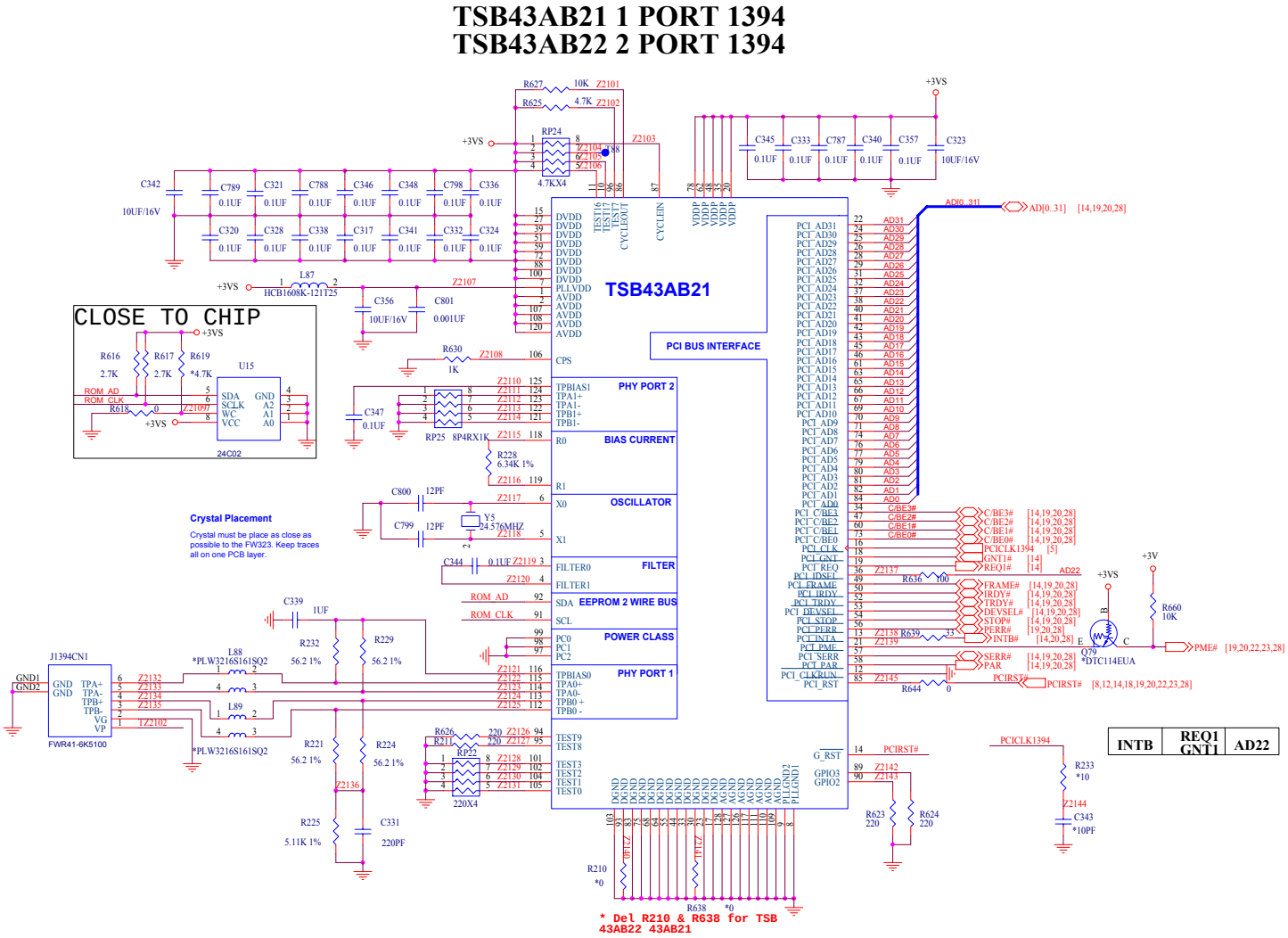

LPC Super I/O & ROM

Sheet 24 of 30
LPC Super I/O & ROM

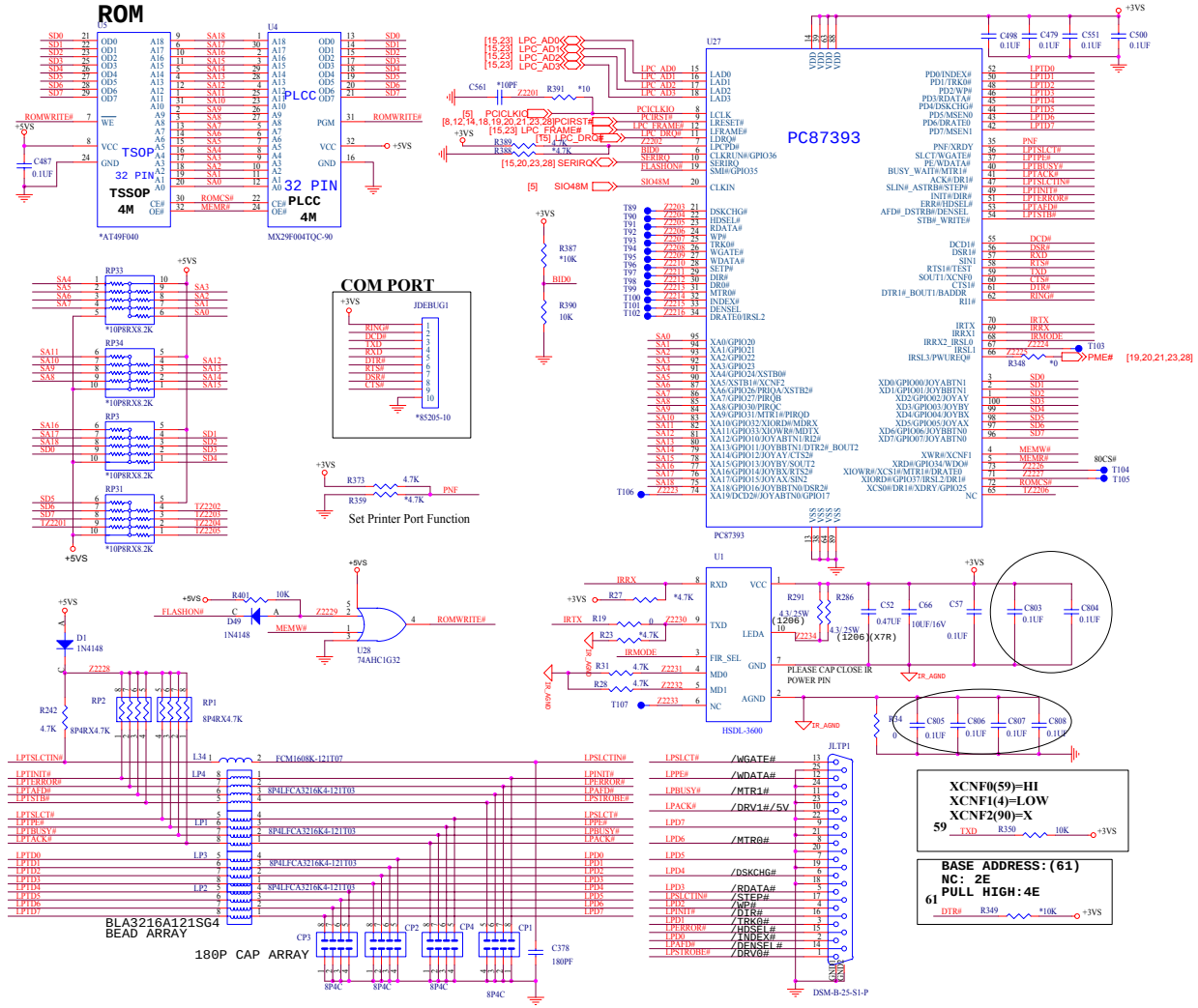

LPC H8

Sheet 25 of 30
LPC H8

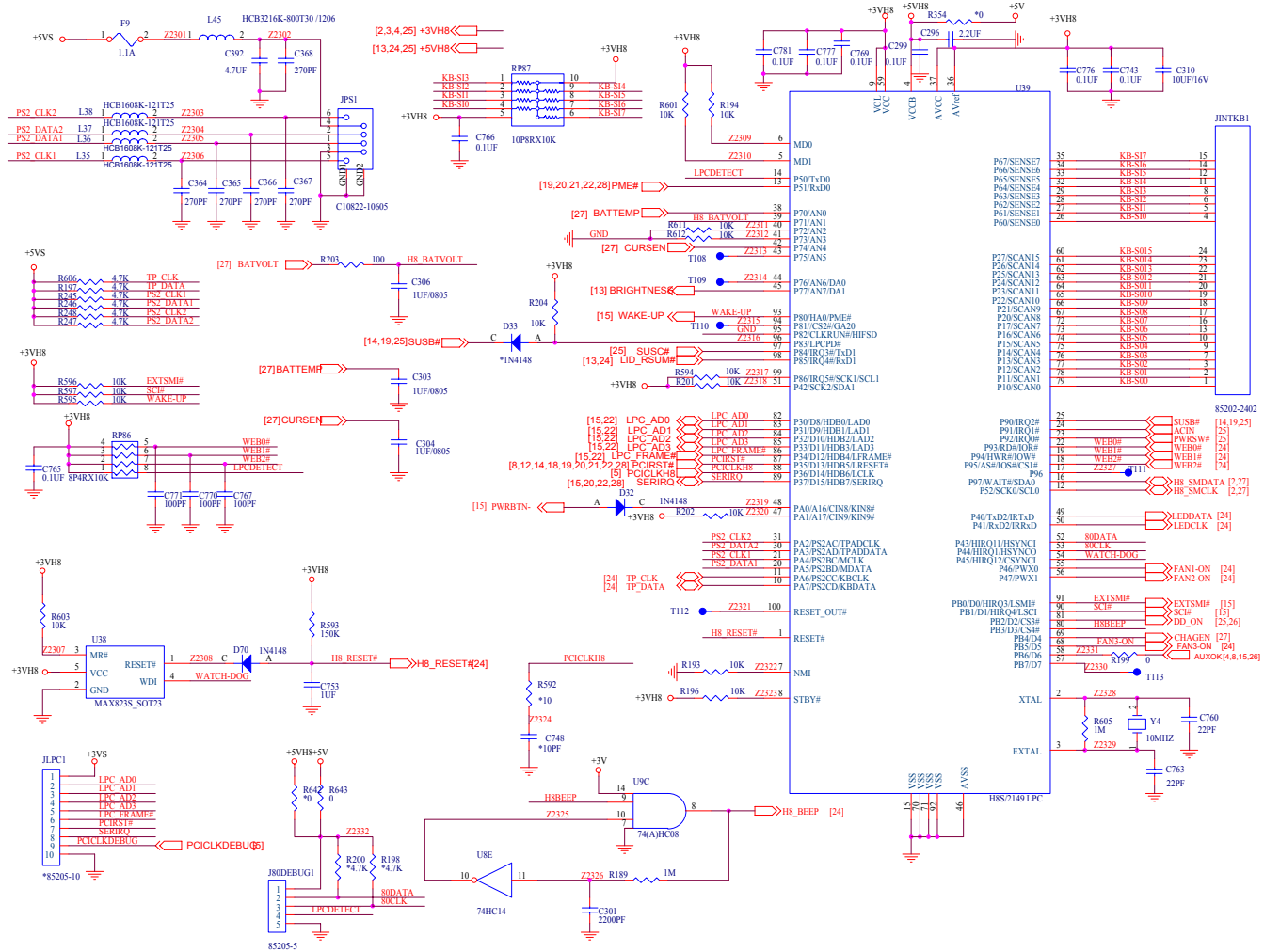

Fan / Audio & Modem Conn

Sheet 26 of 30
Fan / Audio & Modem Conn

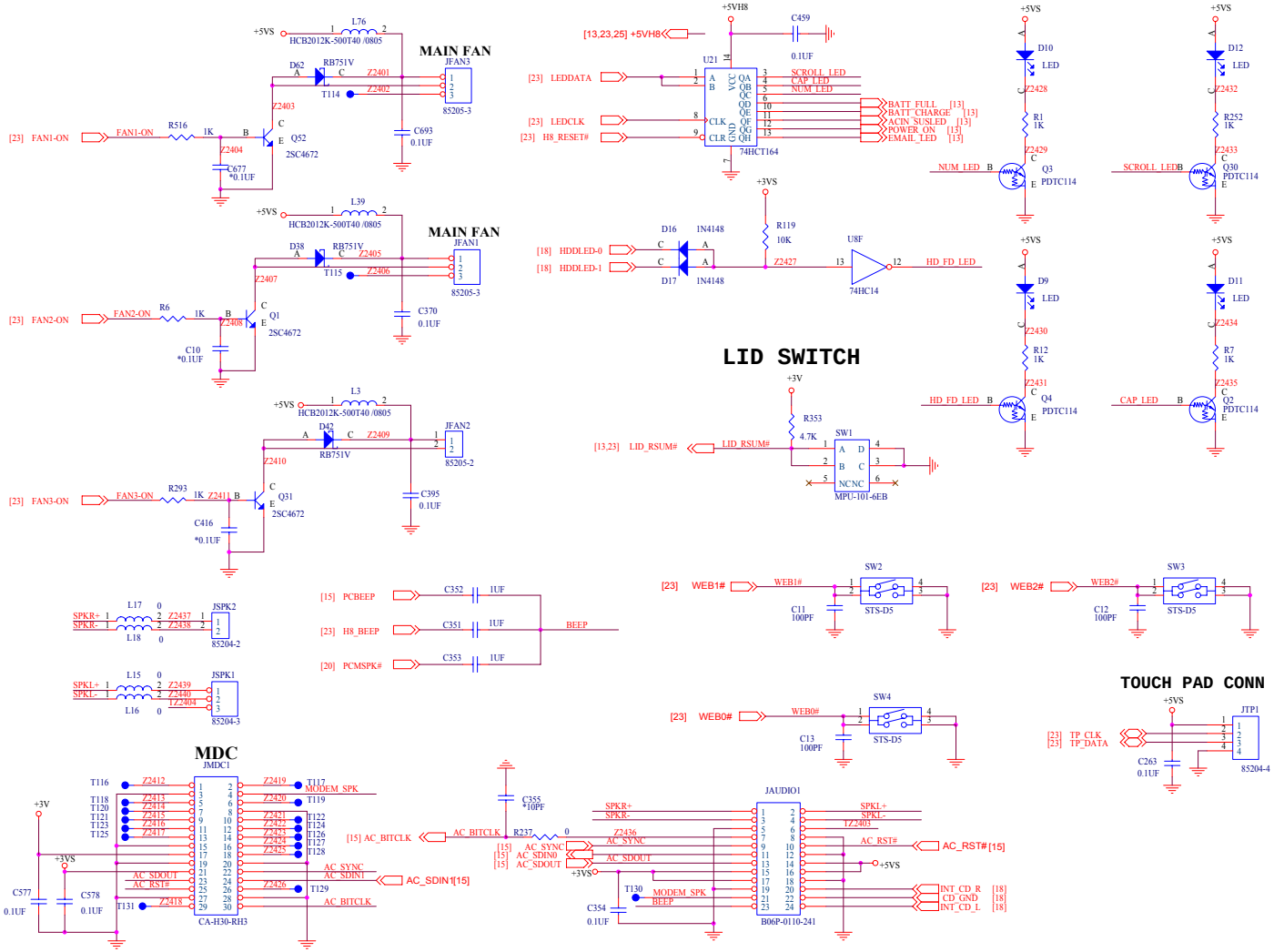

Power Board / Power Button

Sheet 27 of 30
Power Board / Power Button

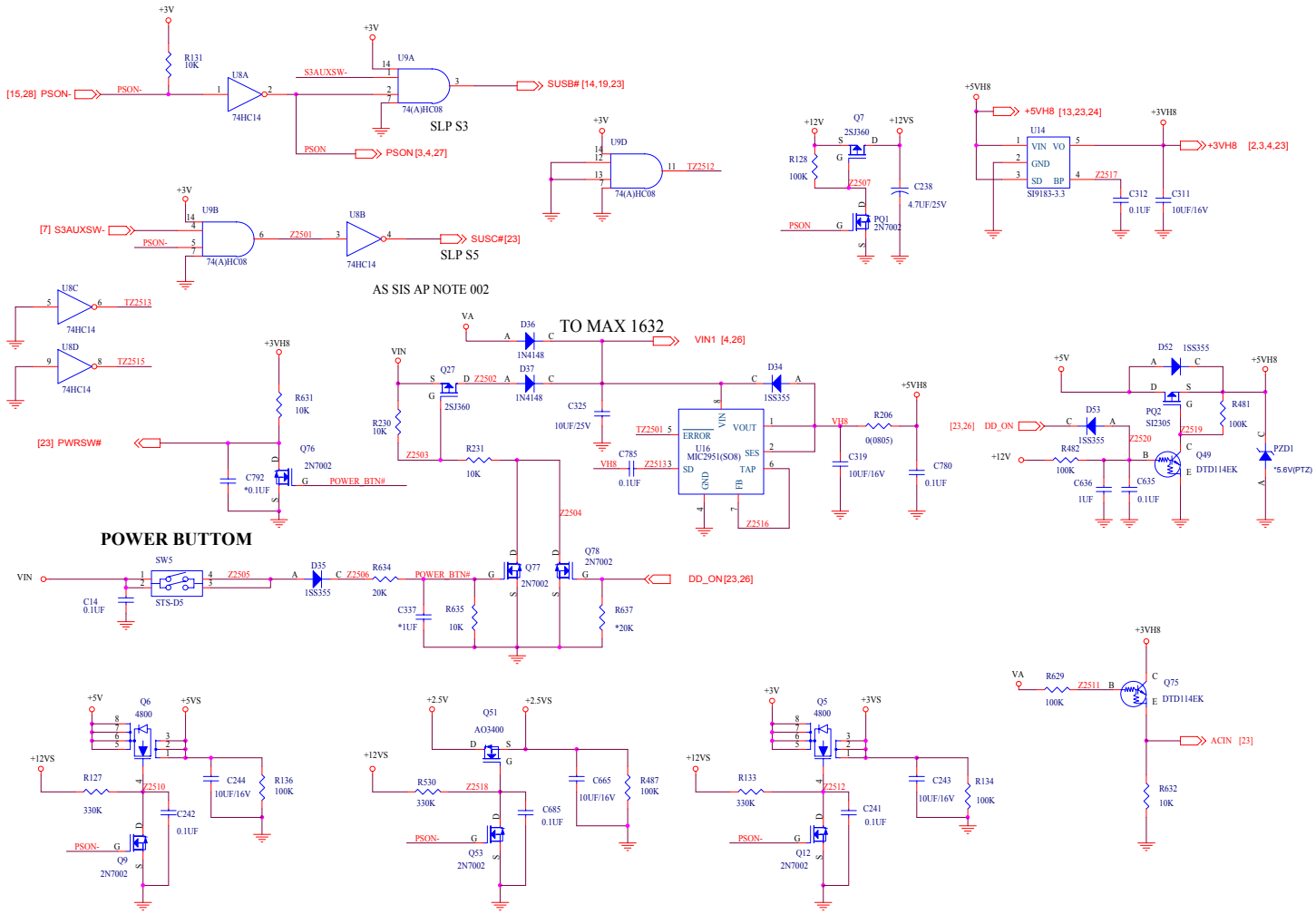

+3V, +5V, +12V

Sheet 28 of 30
+3V, +5V, +12V

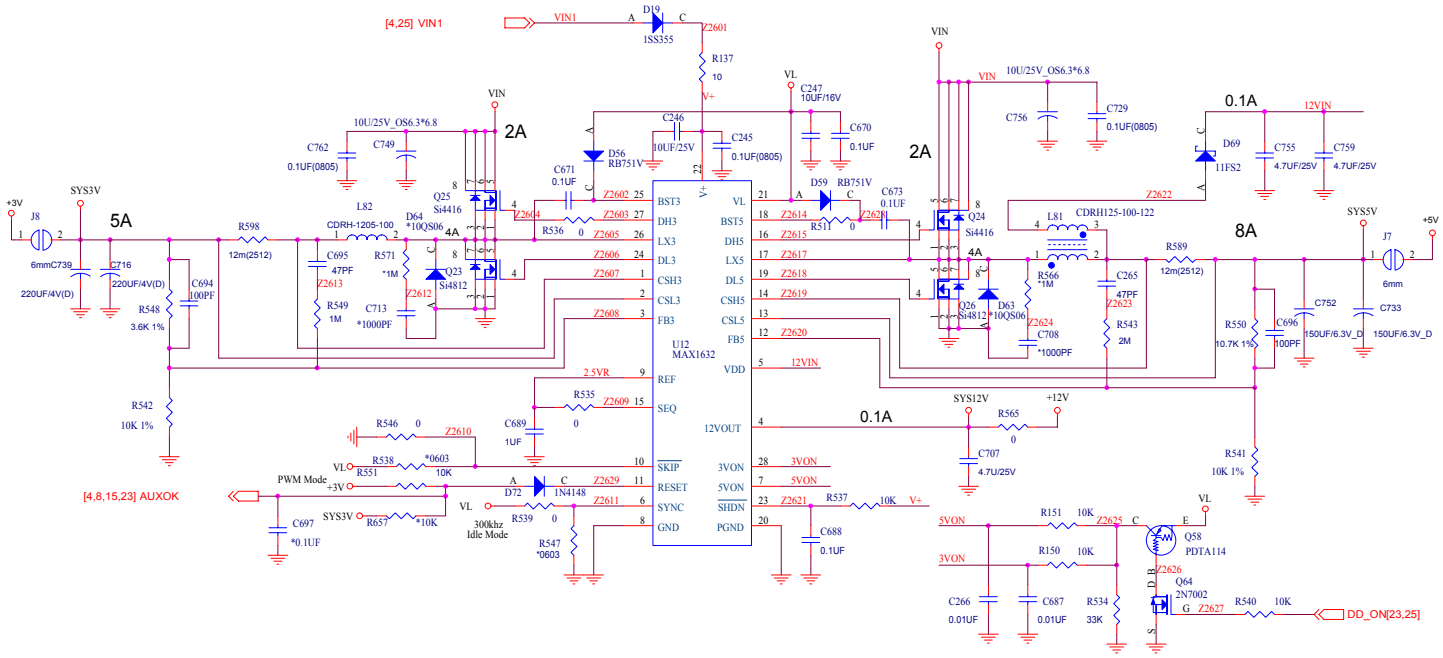

Charger - PWM

Sheet 29 of 30
Charger - PWM

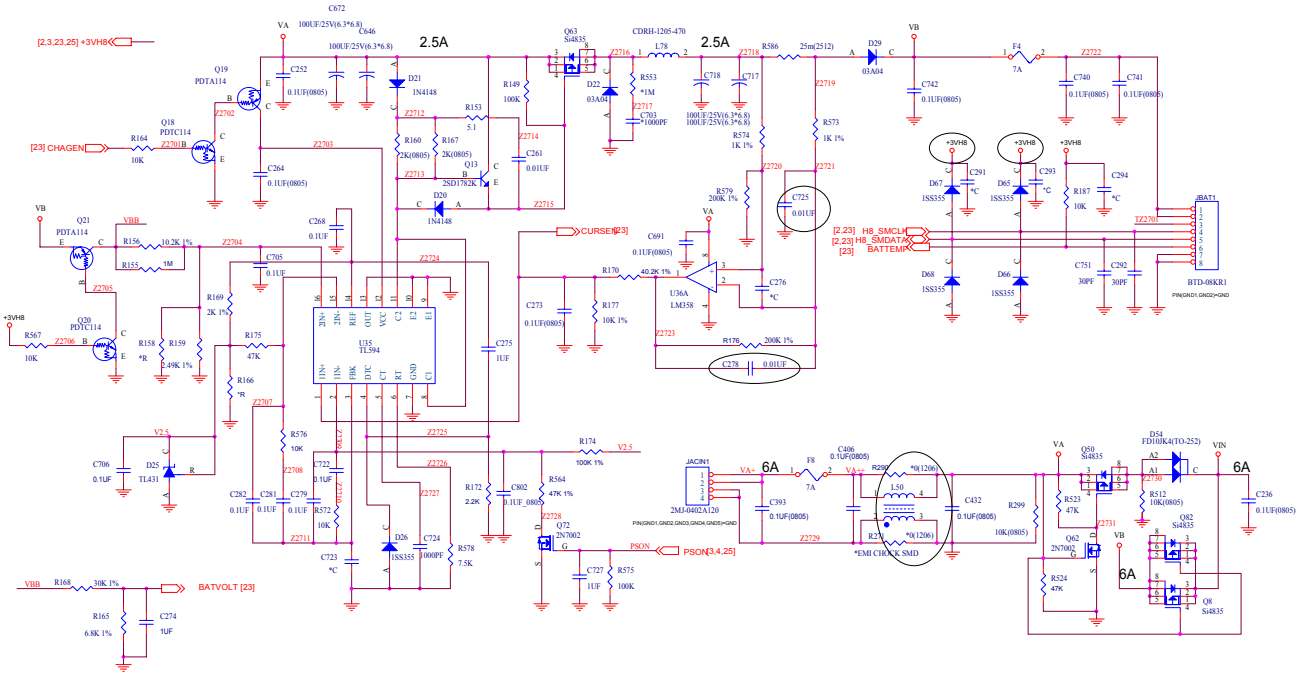

3VH8, +1.8V

Sheet 30 of 30
3VH8, +1.8V

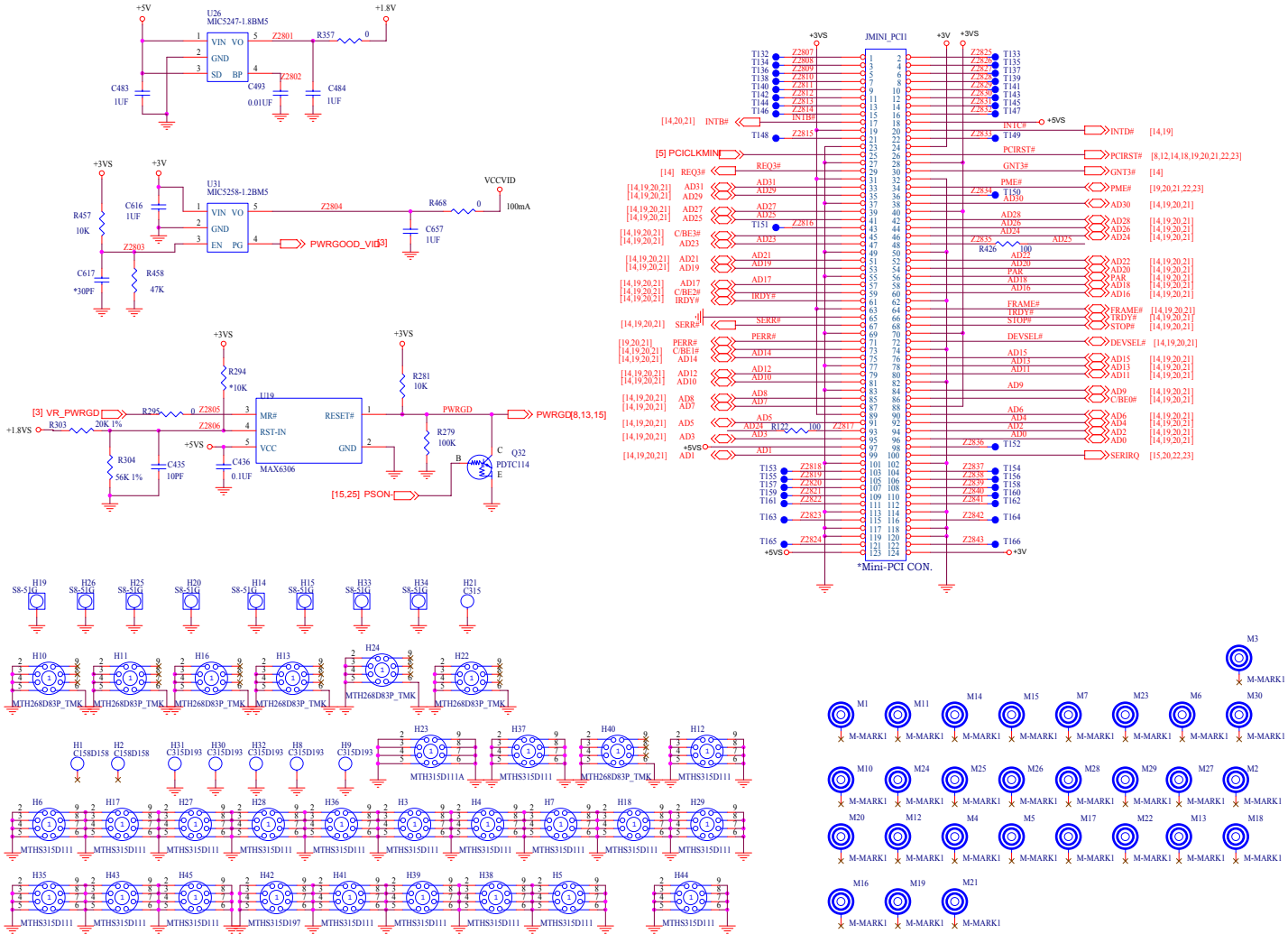

Inverter Board
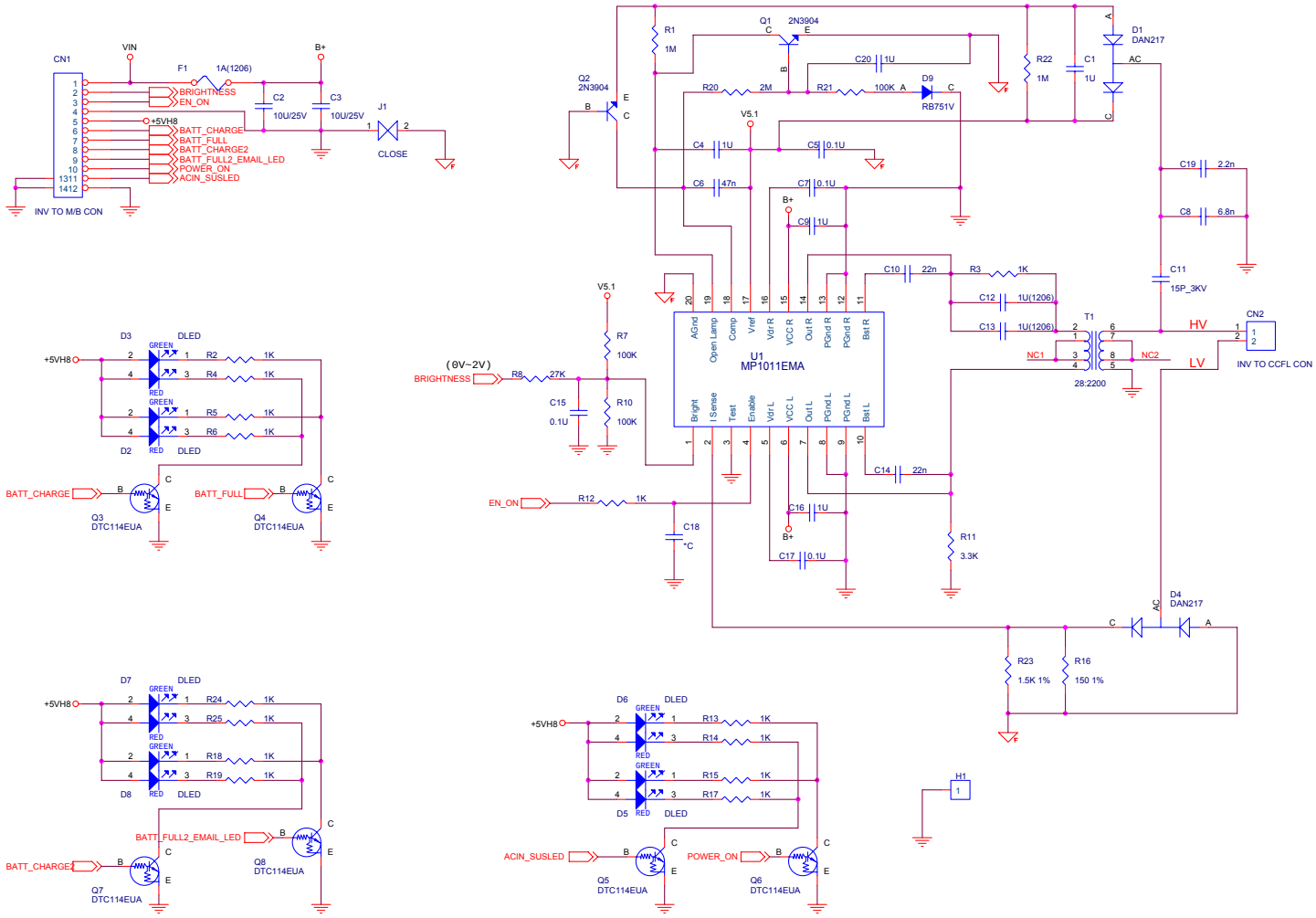
Sheet 1 of 1
Inverter Board